34980A Multifunction Switch/Measure Unit

KEYSIGHT

MAINFRAME USER'S GUIDE

Notices

Copyright Notice

© Keysight Technologies 2004-2025

No part of this manual may be reproduced in any form or by any means (including electronic storage and retrieval or translation into a foreign language) without prior agreement and written consent from Keysight Technologies as governed by United States and international copyright laws.

Trademarks

Microsoft® and Windows® are U.S. registered trademarks of Microsoft Corporation.

Manual Part Number

34980-90005

Edition

Edition 14, February 2025

Printed in:

Printed in Malaysia

Published by:

Keysight Technologies
Bayan Lepas Free Industrial Zone,
11900 Penang, Malaysia

Technology Licenses

The hardware and/or software described in this document are furnished under a license and may be used or copied only in accordance with the terms of such license.

Declaration of Conformity

Declarations of Conformity for this product and for other Keysight products may be downloaded from the Web. Go to http://www.keysight.com/go/conformity. You can then search by product number to find the latest Declaration of Conformity.

U.S. Government Rights

The Software is "commercial computer software," as defined by Federal Acquisition Regulation ("FAR") 2.101. Pursuant to FAR 12.212 and 27.405-3 and Department of Defense FAR Supplement ("DFARS") 227.7202, the U.S. government acquires commercial computer software under the same terms by which the software is customarily provided to the public. Accordingly, Keysight provides the Software to U.S. government customers under its standard commercial license, which is embodied in its End User License Agreement (EULA), a copy of which can be found at http://www.keysight.com/find/sweula. The license set forth in the EULA represents the exclusive authority by which the U.S. government may use, modify, distribute, or disclose the Software. The EULA and the license set forth therein, does not require or permit, among other things, that Keysight: (1) Furnish technical information related to commercial computer software or commercial computer software documentation that is not customarily provided to the public; or (2) Relinquish to, or otherwise provide, the government rights in excess of these rights customarily provided to the public to use, modify, reproduce, release, perform, display, or disclose commercial computer software or commercial computer software documentation. No additional government requirements beyond those set forth in the EULA shall apply, except to the extent that those terms, rights, or licenses are explicitly required from all providers of commercial computer software pursuant to the FAR and the DFARS and are set forth specifically in writing elsewhere in the EULA. Keysight shall be under no obligation to update, revise or otherwise modify the Software. With respect to any technical data as defined by FAR 2.101, pursuant to FAR 12.211 and 27.404.2 and DFARS 227.7102, the U.S. government acquires no greater than Limited Rights as defined in FAR 27.401 or DFAR 227.7103-5 (c), as applicable in any technical data.

Warranty

THE MATERIAL CONTAINED IN THIS DOCUMENT IS PROVIDED "AS IS," AND IS SUBJECT TO BEING CHANGED, WITHOUT NOTICE, IN FUTURE EDITIONS. FURTHER, TO THE MAXIMUM EXTENT PERMITTED BY APPLICABLE LAW, KEYSIGHT DISCLAIMS ALL WARRANTIES, EITHER EXPRESS OR IMPLIED, WITH REGARD TO THIS MANUAL AND ANY INFORMATION CONTAINED HEREIN, INCLUDING BUT NOT LIMITED TO THE IMPLIED WARRANTIES OF MERCHANTABILITY AND FITNESS FOR A PARTICULAR PURPOSE. KEYSIGHT SHALL NOT BE LIABLE FOR ERRORS OR FOR INCIDENTAL OR CONSEQUENTIAL DAMAGES IN CONNECTION WITH THE FURNISHING, USE, OR PERFORMANCE OF THIS DOCUMENT OR OF ANY INFORMATION CONTAINED HEREIN. SHOULD KEYSIGHT AND THE USER HAVE A SEPARATE WRITTEN AGREEMENT WITH WARRANTY TERMS COVERING THE MATERIAL IN THIS DOCUMENT THAT CONFLICT WITH THESE TERMS, THE WARRANTY TERMS IN THE SEPARATE AGREEMENT SHALL CONTROL.

Safety Information

CAUTION

A CAUTION notice denotes a hazard. It calls attention to an operating procedure, practice, or the like that, if not correctly performed or adhered to, could result in damage to the product or loss of important data. Do not proceed beyond a CAUTION notice until the indicated conditions are fully understood and met.

WARNING

A WARNING notice denotes a hazard. It calls attention to an operating procedure, practice, or the like that, if not correctly performed or adhered to, could result in personal injury or death. Do not proceed beyond a WARNING notice until the indicated conditions are fully understood and met.

NOTE

A NOTE calls the user's attention to an important point or special information in the text.

NOTE This document contains references to Agilent. Please note that Agilent's Test and Measurement business has become Keysight Technologies. For more information, go to www.keysight.com.

Safety Symbols

The following symbols or markings that may be on or with the instrument and in the documentation indicate precautions which must be taken to maintain safe operation of the instrument.

~	Alternating current (AC)		Caution, risk of electric shock
	Frame or chassis (ground) terminal		Caution, risk of danger (refer to this manual for specific Warning or Caution information)
	Standby supply. Unit is not completely disconnected from ac mains when switch is off	⎓	Direct current (DC)
O	Off (mains supply)	I	On (mains supply)
3 ~	Three phase alternating current		Presence of a laser device
	Protective earth (ground) terminal		Equipment protected throughout by double insulation or reinforced insulation
	Caution, hot surface		Product is sensitive to electrostatic discharge

Additional Safety Notices

The following general safety precautions must be observed during all phases of operation of this instrument. Failure to comply with these precautions or with specific warnings or instructions elsewhere in this manual violates safety standards of design, manufacture, and intended use of the instrument. Keysight Technologies assumes no liability of the customer's failure to comply with the requirements.

WARNING Refer to the User Guides of the 34980A and relevant modules before using the equipment.

WARNING

GENERAL

If this product is not used as specified in the operating instructions, the protection provided by the equipment could be impaired. This product must be used in a normal condition (in which all means for protection are intact) only. Any external connections must be made prior to applying power.

WARNING

GROUND THE INSTRUMENT

This is a Safety Protection Class I product (provided with a protective earthing ground incorporated in the power cord). The mains plug shall only be inserted in a socket outlet provided with a protective earth contact. Any interruption of the protective conductor inside or outside of the product is likely to make the product dangerous. Intentional interruption is prohibited. The mains wiring and connectors shall be compatible with the connector used in the premise electrical system. Inadequate earth grounding can damage the instrument or cause an electrical shock hazard. Always use the three prong AC power cord supplied with the instrument or one with equal or better ratings.

Connect to AC power cord as follows:

- Ensure the power cord is not damaged.
- Install the signal generators so that one of the following items is readily identifiable and easily reached by the operator: AC power cord, alternative switch or circuit breaker.
- Insert the mains plug into a socket outlet provided with a protective earth grounding.

WARNING

The detachable power cord is the instrument disconnecting device. It disconnects the mains circuits from the mains supply before other parts of the instrument. The front panel switch is only a standby switch and is not a LINE switch (disconnecting device). The instrument power cord does not disconnect or de-energize external circuits connected to the analog bus, terminal blocks or modules.

WARNING

Do not use adapters or extension cords. These devices may not be sufficiently rated to carry the required current and become a safety hazard.

WARNING

IN CASE OF DAMAGE

Do not use the instrument if it is damaged. Before use, inspect the instrument and all connections. Pay particular attention to the insulation surrounding the connectors and / or cable assembly insulation. NEVER use a cable showing any signs of damage. Faulty cables can cause electrical shock and /or fire hazards and could lead to personal injury or death.

WARNING

Use Keysight supplied power cord or one with same or better electrical rating.

WARNING

The AC Voltage source (outlet) must be in proper working order and provide a secure electrical connection. Do not use the outlet if the power cord makes a loose connection or if the power cord plug does not match the outlet. Do not use the outlet if it is damaged or if the voltage is outside the required range.

CAUTION

The weight of an empty 34980A mainframe (no modules installed) is approximately 19.4 lbs (8.8 kg). Installing modules in the mainframe may increase its weight to a point where two people are required to lift the instrument. If two people are not available, use a mechanical lift to lift the mainframe. The mainframe should be transported using a rolling cart.

WARNING

To prevent electrical shock, disconnect the instrument from mains and external circuits before cleaning. Use a dry cloth or one slightly dampened with water (or 70% Isopropyl Alcohol) to clean the external case parts. Do not attempt to clean internally. Allow any moisture to evaporate prior to energizing the instrument.

WARNING Keysight Customers utilizing the Open Platform Test Systems are classified as follows and require the user to have the appropriate skillset:

Operator: Interacts with the test system in a production environment, selection of test sequences, defining variables, running tests (test results, test statistics, control of marking devices)

Supervisor: Includes access to maintenance functions and utility sequences (control of hardline system functions, access to test area

Developer: Full access

WARNING Removal of the instrument's cover is to be conducted by qualified personnel only. Only qualified, trained personnel who are aware of the hazards involved should remove instrument covers. Prevent operators from accessing external circuits, test fixtures, cables or wherever hazardous voltages may be present. Failure to recognize and observe normal safety precautions could result in personal injury or death.

WARNING ENVIRONMENTAL HEALTH & SAFETY: When any channel is connected to a hazardous voltage source, the instrument and the device under test should be supervised, following local EHS practices to restrict access.

WARNING The service instructions are for use by qualified personnel only. To avoid electrical shock, do not perform any servicing unless you are qualified to do so.

WARNING Hazardous voltage levels capable of causing death, may be present on a channel. Use extreme caution when handling, testing and adjusting this instrument. Any voltages greater than 30 Vrms, 42.4 Vpeak and 60 Vdc are considered hazardous (IEC 61010-1).

When working with hazardous voltage levels, intentionally closing of multiple bus and channel relays could cause a potentially lethal hazard on external connections. Use extreme caution when handling, testing and adjusting this instrument. Do not perform these procedures unless qualified to do so. Failure to recognize and observe normal safety precautions could result in personal injury or death.

WARNING Under certain conditions, hazardous voltage levels capable of causing injury or death may remain even after external circuits have been disconnected. To avoid electrical shock, remove the main power cord from the 34980A and ensure all connections to the DUT, including field wiring to the instrument and the analog bus (if present) are deenergized and all circuits are discharged before coming in contact with the system. Ensure no hazardous voltages remain on any accessible before handling any part of the instrument and test setup, making connections to the system, removing covers or cleaning the instrument.

WARNING Safety of any system incorporating the equipment is the responsibility of the assembler of the system.

WARNING When interconnecting system components, the overall maximum allowable input rating of the system would default to the lowest rating of any one system component.

WARNING

When working with hazardous voltage levels, intentionally closing of multiple bus and channel relays could cause a potentially lethal hazard on external connections. Use extreme caution when handling and testing and adjusting this instrument. Do not perform these procedures unless qualified to do so. Failure to recognize and observe normal safety precautions could result in personal injury or death.

In a matrix switch configuration, any one of the signal sources can be connected to any one of the test inputs. Be aware that with a matrix, it is possible to connect more than one source at the same time. Therefore, it is important to make sure that hazardous or unwanted conditions are not created by these connections.

It is possible to connect more than one voltage level at the same time when using this system. Ensure that hazardous or unwanted conditions are not created by these connections. Failure to recognize or observe normal safety precautions could result in equipment damage and may result in hazardous conditions such as fire or shock and could lead to personal injury or death.

WARNING

Modules 34931A, 34932A, 34933A, 34934A:

It is possible to connect more than one power source at the same time with a matrix. Ensure that hazardous or unwanted conditions are not created by these connections. Failure to recognize or observe normal safety precautions could result in equipment damage and may result in hazardous conditions such as fire or shock and could lead to personal injury or death.

WARNING

Module 34937A, Terminal Block 34937T:

The maximum differential voltage between Form A and Form C is not to exceed 300 Vrms or Vdc in Pollution Degree I or 100 Vrms or Vdc for Pollution Degree 2. Exceeding these ratings may cause electrical shock and /or fire hazards and could lead to personal injury or death.

When wired to both Form A and Form C, and applying hazardous live signals (voltages above 30 Vac, 42.2 Vpeak or 60 Vdc, IEC 61010-1), all circuits must also be considered hazardous, as a fault in the circuitry may lead to electrical shock hazards resulting in personal injury or death.

Environmental Conditions

Keysight 34980A is designed for indoor use in an installation category II and low condensation environment. Table below shows the general environmental conditions for this instrument. Refer to the product data sheet at https://literature.cdn.keysight.com/litweb/pdf/5989-1437EN.pdf for more information on the instrument general specifications.

General specifications	Requirement
Temperature	Operating condition: 0°C to 55°C Storage condition: -40°C to 70°C
Humidity	Up to 80% R.H. at 40°C (non-condensing), decreasing linearly to 37% R.H. at 55°C (non-condensing)[a]
Altitude	Up to 2,000 m
Pollution degree	1 or 2

a From 40°C to 55°C, the maximum % Relative Humidity follows the line of constant dew point.

WARNING This product is designed for use in INSTALLATION CATEGORY II and POLLUTION DEGREE 1 and 2 (See module specifications for ratings for each Pollution Degree environment).

NOTE Pollution Degree 1: No pollution or only dry, non-conductive pollution occurs. The pollution has no influence (on insulation).

Pollution Degree 2: Normally only non-conductive pollution occurs. Occasionally, a temporary conductivity (leakage current between isolated conductors) caused by condensation can be expected.

NOTE This product has been designed and tested in accordance with accepted industry standards and has been supplied in a safe condition. The documentation contains information and warnings that must be followed by the user to ensure safe operation and to maintain the product in a safe condition.

CAUTION Degradation of some product specifications can occur in the presence of ambient electromagnetic (EM) fields and noise that are coupled to the power line or I/O cables of the instrument. The instrument will self-recover and operate to all specifications when the source of ambient EM field and noise are removed or when the instrument is protected from the ambient EM field or when the instrument cabling is shielded from the ambient EM noise.

Regulatory Markings

CE	The CE mark is a registered trademark of the European Community. This CE mark shows that the product complies with all the relevant European Legal Directives.	C US	The CSA mark is a registered trademark of the Canadian Standards Association.
UK CA	The UK conformity mark is a UK government owned mark. Products showing this mark comply with all applicable UK regulations.	C US	The CSA component mark is a registered trademark of the Canadian Standards Association.
CAN ICES/NMB-001(A)	This indicates that this ISM device complies with the Canadian ICES-001. Interference-Causing Equipment Standard for industrial, scientific and medical (ISM) equipment. Matériel industriel, scientifique et médical (ISM)	ccr.keysight@keysight.com	The Keysight email address is required by EU directives applicable to our product.
IP x y	This mark indicates product has been designed to meet the requirements of "IP x y", where "x" is the solid particle protection and "y" is the liquid ingress protection.	ISM 1-A	This is a symbol of an Industrial Scientific and Medical Group 1 Class A product. (CISPR 11, Clause 5)
CE CAN ICES/NMB-001(A) ISM GRP 1-A	The CE mark is a registered trademark of the European Community. This CE mark shows that the product complies with all the relevant European Legal Directives. ICES/NMB-001 indicates that this ISM device complies with the Canadian ICES-001. Cet appareil ISM est conforme a la norme NMB-001 du Canada. ISM GRP.1 Class A indicates that this is an Industrial Scientific and Medical Group 1 Class A product.	CAN ICES/NMB-001(A) ISM GRP 1-A	This is a combined marking to indicate product compliance with the Industry Canadian Interference-Causing Equipment Standard (ICES/NMB-001). This is also a symbol of an Industrial Scientific and Medical Group 1 Class A product (CISPR 11, Clause 5).

	This symbol is a South Korean Class A EMC Declaration. This is a Class A instrument suitable for professional use and in electromagnetic environment outside of the home.		The RCM mark is a registered trademark of the Australian Communications and Media Authority.
	This symbol indicates the time period during which no hazardous or toxic substance elements are expected to leak or deteriorate during normal use. Forty years is the expected useful life of the product.		This instrument complies with the WEEE Directive (2002/96/EC) marking requirement. This affixed product label indicates that you must not discard this electrical or electronic product in domestic household waste.
	Universal recycling symbol.		

Waste Electrical and Electronic Equipment (WEEE) Directive 2002/96/EC

The crossed out wheeled bin symbol indicates that separate collection for waste electric and electronic equipment (WEEE) is required, as obligated by the EU DIRECTIVE and other National legislation.

Please refer to keysight.com/go/takeback to understand your Trade in options with Keysight in addition to product takeback instructions.

Sales and Technical Support

To contact Keysight for sales and technical support, refer to the support links on the following Keysight websites:

- www.keysight.com/find/34980a
  (product-specific information and support, software and documentation updates)
- www.keysight.com/find/assist
  (worldwide contact information for repair and service)

THIS PAGE HAS BEEN INTENTIONALLY LEFT BLANK.

Table of Contents

Safety Symbols 3
Additional Safety Notices 4
Environmental Conditions 11
Regulatory Markings 13
Waste Electrical and Electronic Equipment (WEEE) Directive 2002/96/EC 15
Sales and Technical Support 15

1 Introduction to the 34980A

Data Acquisition Overview 24
- Measurement Software 25
- Data Acquisition Circuitry 27
- Plug-In Modules 29
- System Cabling 29
- Transducers and Sensors 30
- Alarm Limits 31

Signal Routing and Switching 32
- Switching Topologies 32
- RF and Microwave Switching 35

Measurement Input 36
- The Internal DMM 36
- Scanning 38
- Scanning With External Instruments 40
- The Digital Modules 42

Control Output 44
- The Digital Modules 44
- The Actuator / General-Purpose Switches 47

2 Getting Started

Front Panel at a Glance 50
Rear Panel at a Glance 52

Rear Panel Connector Pinouts 54
External Trigger/Alarms Connector (Male D-Sub) 54
Analog Bus Connector (Female D-Sub) 55
Annunciator Display Indicators 56
Installing and Connecting Modules 58
Removing a Slot Cover 59
Installing a Module 60
Instrument Rack Mounting 70
Operating the 34980A from the Front Panel Keyboard 73
Front Panel Menu Reference 73
Menu Example 1: Setting the Time and Date 76
Menu Example 2: Opening and Closing Channel Relays 78
Using the Measure Keys 80
Menu Example 3: Configuring the DMM for a Measurement 81
Menu Example 4: Configuring a Channel for a Measurement 84
Connecting the 34980A to Your Computer 88
Connecting Over LAN 89
Connecting Over GPIB 95
Connecting Over USB 96
Communicating with the 34980A 98
Operating the 34980A using the Integrated Web Browser Interface . . 99
Launching the Web Interface 100
Displaying the Browser Web Control Page 102
Selecting the “Allow Full Control” Mode 103
Setting a Web Browser Password 104
Closing and Opening Channel Relays 105
Modifying the Channel Configuration 106
Sending SCPI Commands Via the Web Interface 107
34980A Documentation Map 111

3 Features and Functions

Front Panel Features 115
Front Panel Display 115

Front Panel Controls 117
Basic Operating Modes 118
SCPI Commands 119
SCPI Language Conventions 119
Rules for Using a Channel List 120
Remote Interface Configuration 121
GPIB Interface 122
LAN Interface 122
Clearing 34980A Memory 131
Volatile Memory 131
Non-Volatile Memory 131
Analog Bus and Internal DMM Considerations 133
Environmental Operating Conditions 133
Electrical Operating Conditions 134
General Measurement Configuration 136
Overview of Measurement Modes 136
Analog Buses 139
Measurement Functions 141
Measurement Range 142
Measurement Resolution 143
Custom A/D Integration Time 145
Autozero 146
Trigger Delay 147
Automatic Trigger Delays 148
Safety Interlock 149
User-Defined Channel Labels 150
2-Wire Versus 1-Wire Mode 152
Temperature Measurement Configuration 153
Measurement Units 153
Thermocouple Measurements 154
RTD Measurements 156
Thermistor Measurements 157
Voltage Measurement Configuration 158

DC Input Resistance 158
AC Low Frequency Filter 159
Resistance Measurement Configuration 160
Offset Compensation 160
Current Measurement Configuration 162
AC Low Frequency Filter 162
Frequency Measurement Configuration 164
Low Frequency Timeout 164
Mx+B Scaling 165
Scanning 167
Rules for Scanning 168
Adding Channels to the Scan List 170
Scan Trigger Source 172
Trigger Count 177
Sweep Count 178
Sample Count 179
Channel Delay 181
Automatic Channel Delays 182
Reading Format 184
Non-Sequential Scanning 185
Viewing Readings Stored in Memory 187
Monitor Mode 189
Scanning With External Instruments 191
Alarm Limits 194
Viewing Stored Alarm Data 198
Using the Alarm Output Lines 199
Using Alarms With the Digital Modules 201
Sequences 204
Defining a Sequence 205
Querying the Sequence Definition 207
Executing a Sequence 207
Executing a Sequence on an Alarm Condition 209
Deleting Sequences 210

Reading the List of Stored Sequences 210
System-Related Operations 212
Firmware Revision 212
Product Firmware Updates 213
Instrument State Storage 213
Error Conditions 215
Self-Test 216
Front-Panel Display Control 217
Front-Panel Number Format 218
Real-Time System Clock 218
Internal DMM Disable 219
Relay Cycle Count 219
SCPI Language Version 220
Calibration Overview 221
Calibration Security 221
Calibration Count 222
Calibration Message 223
Factory Reset State 224
Instrument Preset State 227

4 Introduction to the Plug-In Modules for the 34980A
User's Guides for the 34980A's Plug-In Modules 232
Available Modules, at a Glance 233
Slot and Channel Addressing Scheme 235
Interconnection Solutions Overview 237
Module Considerations 239
General Considerations 239
Environmental Operating Conditions 239
Electrical Operating Conditions 242

5 34980A Current Limiting Graphs
34980A Current Limiting Graphs 246

6 34980A Safety Guidelines
Safety Guidelines (IEC 61010-1) 258

THIS PAGE HAS BEEN INTENTIONALLY LEFT BLANK.

1 Introduction to the 34980A

Data Acquisition Overview 24
Signal Routing and Switching 32
Measurement Input 36
Control Output 44

This chapter provides an overview of a computer-based data acquisition and measurement control system using the Keysight 34980A Multifunction Switch/Measure Unit and typical plug-in modules.

Data Acquisition Overview

You can use the Keysight 34980A as a stand-alone instrument, but for most applications you will want to take advantage of its PC connectivity and remote operation capabilities. A simplified data acquisition system is shown below.

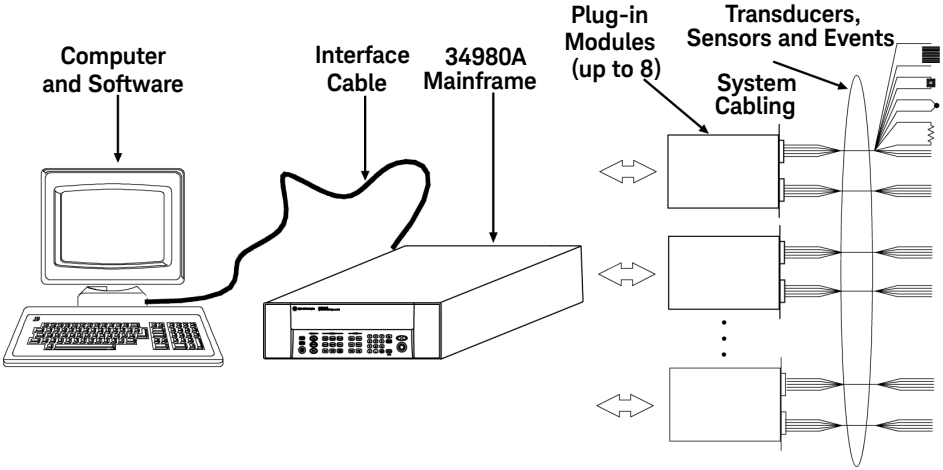

The system configuration shown above offers the following advantages:

- You can use the 34980A to perform data storage, data reduction, mathematical calculations, and conversion to engineering units.
- You can use the PC to easily configure and present data.
- You can electrically isolate analog signals and measurement sensors from the noisy PC environment and earth ground.
- You can use a single PC to monitor multiple instruments and measurement points while performing other PC-based tasks.

The 34980A is shipped with Ethernet, USB and GPIB (IEEE-488) interfaces. For a detailed description of these connections, see "Connecting the 34980A to Your Computer" on page 88.

Ideally, *before* selecting a PC interface mode and making physical connections between the 34980A and your PC, you would *first* determine what software tools you will be using to communicate with and control the 34980A (see "Measurement Software" on page 25 for a brief description of available software choices).

- If you will be using the 34980A's integrated Web Browser interface (LAN only), no additional software is required for connection.
- If you will be using another software tool (e.g. *BenchLink Data Logger Pro*, *Keysight IO Libraries Suite*), you will need to install both that software and a device driver *before* connecting the instrument over GPIB or USB. No device driver is required for LAN.
- If you install the IO Libraries Suite, USB device drivers should be installed automatically.

Measurement Software

A variety of software tools are available for remote communication with the 34980A; the most commonly used tools are briefly discussed below.

Data Logging and Monitoring

Keysight 34832A BenchLink Data Logger Pro is a Windows®-based application available at www.keysight.com/find/software. It is designed to make it easy to use the 34980A with your PC (over GPIB, USB or LAN) for collecting and analyzing data. You program the desired measurement, scan and data logging requirements using an intuitive, tabbed spreadsheet environment; data is displayed in tabular and graphical formats.

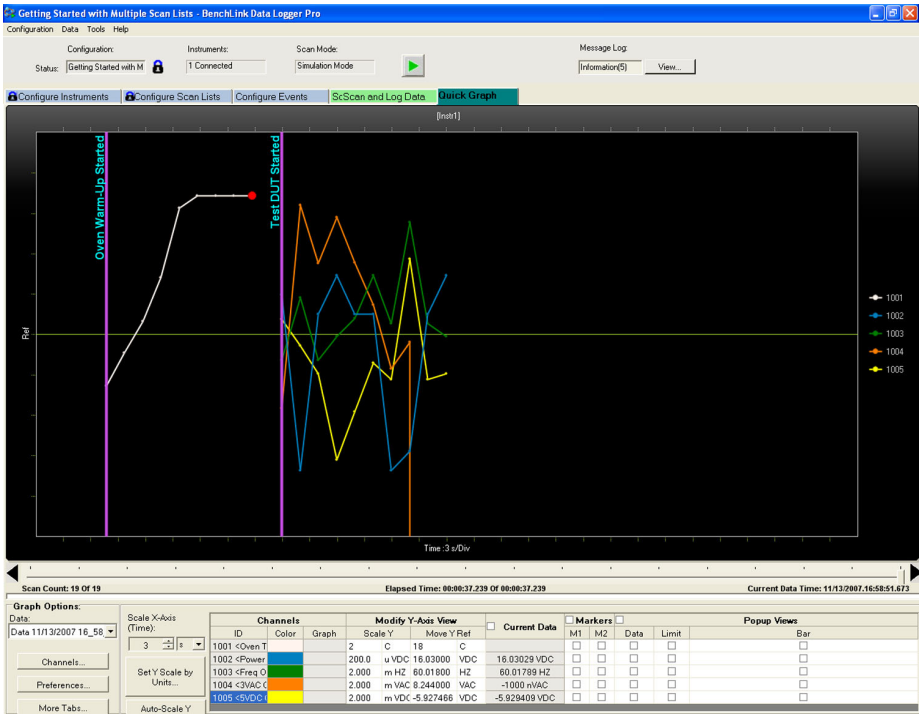

The *BenchLink Data Logger Pro* software provides several advanced features not available in the standard *BenchLink Data Logger* software at www.keysight.com/find/software. Particularly, the Pro version allows for customized action scripts, conditional control of external instruments, decision making or program initiation based on limit checks and alarm events, and advanced math operations. Both the standard and Pro versions are supplied on the same link. The Pro version can be used for 30 days without obligation; subsequently a software license is required for its continued use. Go to www.keysight.com/find/34832A for purchasing information.

Web Browser Interface

The 34980A incorporates in its firmware a graphic Web Browser interface for remote LAN access and control of the instrument via a Java-enabled Web browser, such as Microsoft® Internet Explorer. While not as comprehensive a tool as the *BenchLink Data Logger* software, the Web Browser provides an alternative method for remote system configuration, troubleshooting, and monitoring.

For a detailed description of the Web Browser interface, see "Operating the 34980A using the Integrated Web Browser Interface" on page 99.

Other Software for Automated Testing with Multiple Instruments

These software tools can also be used with the 34980A:

- Keysight IO Libraries Suite
- Keysight IntuiLink
- Keysight VEE (For more information, refer to www.keysight.com/firmware/34980A)
- National Instruments LabVIEW
- Microsoft® Visual Basic or Visual C++

Data Acquisition Circuitry

As shown below, the 34980A's main system processor controls all of the basic functionality of the instrument. This is where the instrument communicates with the plug-in modules, interacts with command transactions over the remote interfaces, and controls the optional internal DMM. The main system processor also performs Mx+B scaling operations, monitors alarm conditions, converts transducer measurements to engineering units, adds time stamp information to scanned measurements, and stores measurement data in memory.

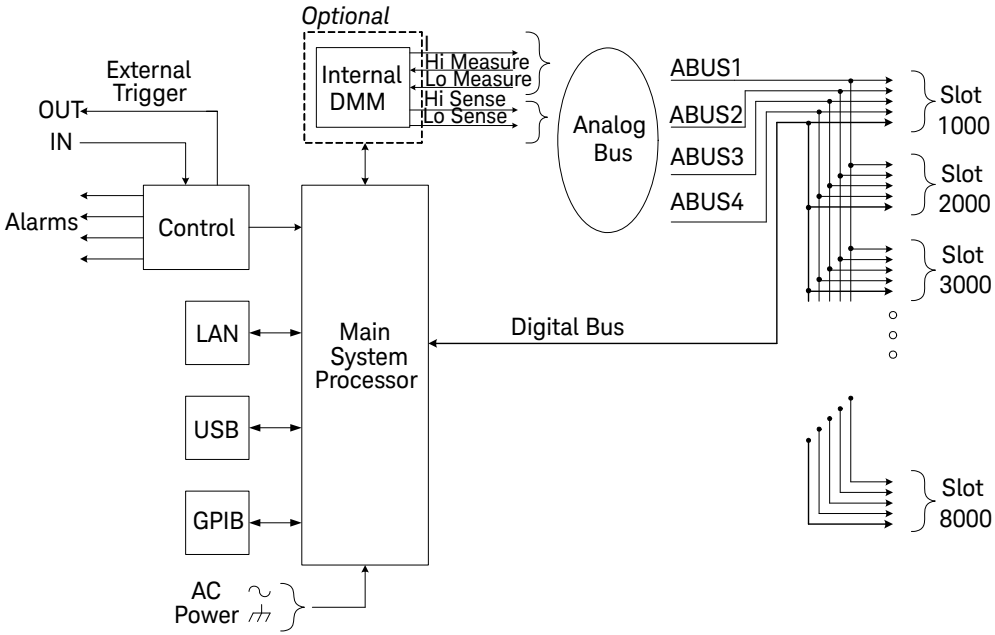

The main system processor also controls activity on the four hardware alarm outputs and external triggering lines. You can use the alarm output lines to trigger external alarm lights, sirens, or send a TTL pulse to your control system.

The 34980A provides four 2-wire internal Analog Buses for easier signal routing. You can route your measurements directly to the optional internal DMM using the 34980A multiplexer and matrix modules or you can connect to external signals via the Analog Bus connector located on the instrument's rear panel. Since four 2-wire buses are provided, you can dedicate one bus for use with the internal DMM while using the other three buses for module extensions or additional signal routing between modules.

Plug-In Modules

The 34980A offers a complete selection of plug-in modules to give you high-quality measurement, switching, and control capabilities. The plug-in modules communicate with the main system processor via the internal digital bus. The multiplexer modules also connect to the internal DMM via the internal Analog Buses. Each module has its own microprocessor to offload the main system processor and minimize backplane communications for faster throughput. See Chapter 4, "Introduction to the Plug-In Modules for the 34980A" for an overview of the available plug-in modules and their functions. Each module has its own User's Guide available online.

System Cabling

Depending on your specific requirements, you can connect your device under test (DUT) to the 34980A using several optional interconnection solutions (see "Interconnection Solutions Overview" on page 237). Detachable terminal blocks are available for low-frequency modules and offer an extremely flexible method for connecting external wiring. You can also connect to the plug-in modules directly using standard cabling with 50-pin D-Sub and 78-pin D-Sub connectors. Optional solder cup connector kits are also available if you choose to build your own custom cabling.

The type of cabling that you use to connect your signals, transducers, and sensors to the module is critical to ensure measurement integrity. Some types of transducers, such as thermocouples, have very specific requirements for the type of cabling that should be used to make connections. Be sure to consider the usage environment when choosing wire gauge size and insulation qualities. Wire insulation typically consists of materials such as PVC or PTFE. The table below lists several common cable types and describes their typical uses.

Cable Type	Common Uses	Comments
Thermocouple Extension Wire	Thermocouple measurements	Available in specific thermocouple types. Also available in a shielded cable for added noise immunity.
Twisted Pair, Shielded Twisted Pair	Measurement inputs, voltage outputs, switching, counting	Most common cable for low-frequency measurement inputs. Twisted pair reduces common mode noise. Shielded-twisted pair provides additional noise immunity.
Shielded Coaxial, Double-Shielded Coaxial	VHF Signal switching	Most common cable for high-frequency signal routing. Available in specific impedance values (50Ω or 75Ω). Provides excellent noise immunity. Double-shielded cable improves isolation between channels. Requires special connectors.
Flat Ribbon, Twisted Pair Ribbon	Digital Input/Output	Often used with mass termination connectors. These cables provide little noise immunity.

Transducers and Sensors

Transducers and sensors convert a physical quantity into an electrical quantity. The electrical quantity is measured and the result is then converted to engineering units by the 34980A's main system processor. For example, when measuring a thermocouple, the instrument measures a dc voltage and mathematically converts it to a corresponding temperature in °C, °F, or K.

Measurement	Typical Transducer Type	Typical Transducer Output
Temperature	Thermocouple	0 mV to 80 mV
	Resistance temperature detector (RTD)	2-wire or 4-wire resistance from 5Ω to 500Ω
	Thermistor	2-wire or 4-wire resistance from 10Ω to 1MΩ
Pressure	Solid state device	±10 VDC
Flow	Rotary type, thermal type	4 mA to 20 mA
Strain	Resistive elements	4-wire resistance from 10Ω to 10 kΩ
Events	Limit switches, optical counters, rotary encoder	0V or 5V pulse train
Digital	System status	TTL levels

Alarm Limits

The 34980A has four alarms which you can configure to alert you when a reading exceeds specified limits on a channel during a scan. You can assign a high limit, a low limit, or both to any configured channel in the scan list. You can assign multiple channels to any of the four available alarms (numbered 1 through 4). For example, you can configure the instrument to generate an alarm on Alarm 1 when a limit is exceeded on any of channels 1003, 2025, or 3020.

You can also assign alarms to channels on the digital modules (34950A and 34952A). For example, you can generate an alarm when a specific bit pattern or bit pattern change is detected on a digital input channel or when a specific count is reached on a totalizer channel. With the digital modules, the channels do not have to be part of the scan list to generate an alarm.

Signal Routing and Switching

The switching capabilities of the plug-in modules available with the 34980A provide test system flexibility and expandability. You can use the switching plug-in modules to route signals to and from your test system or multiplex signals to the internal DMM or external instruments.

Relays are electromechanical devices which are subject to wear-out failure modes. The life of a relay, or the number of actual operations before failure, is dependent upon how the relay is used—applied load, switching frequency, and environment. The 34980A Relay Maintenance System automatically counts the cycles of each relay in the instrument and stores the total count in non-volatile memory on each switch module. You can use this feature to track relay failures and to predict system maintenance requirements. For more information on using this feature, refer to "Relay Cycle Count" on page 219.

WARNING **When working with hazardous voltage levels, intentional closing of multiple bus and channel relays could cause a potential shock hazard on external connections. Use extreme caution when handling, testing and adjusting this instrument. Do not perform these procedures unless qualified to do so. Failure to recognize and observe normal safety precautions could result in personal injury or death.**

Switching Topologies

Several switching plug-in modules are available with different topologies for various applications. The following switching topologies are available:

- Multiplexer (with armature, reed, or FET switches)
- Matrices (with armature or reed switches)
- General Purpose (with Form C or Form A switches)

The following sections describe each of these switching topologies. For more information, see the individual User's Guides included with each module.

Multiplexer Switching

Multiplexers allow you to connect one of multiple channels to a common channel, one at a time. A simple 4-to-1 multiplexer is shown below.

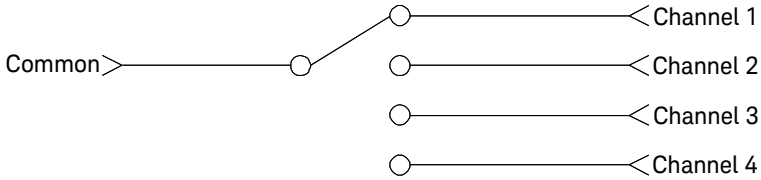

Multiplexers are available in several types:

- One-Wire (Single-Ended) Multiplexers for common LO measurements
- Two-Wire Multiplexers for floating measurements
- Four-Wire Multiplexers for resistance and RTD measurements
- Very High Frequency (VHF) Multiplexers for switching frequencies up to 3 GHz.

When you combine a multiplexer with a measurement device, like the optional internal DMM, you create a scanner. For more information on scanning, see "Scanning" on page 38.

Matrix Switching

A matrix switch connects multiple inputs to multiple outputs and therefore offers more switching flexibility than a multiplexer. Use a matrix for switching low-frequency (less than 30 MHz) signals only. A matrix is arranged in rows and columns. For example, a simple 3x3 matrix could be used to connect three sources to three test points as shown below.

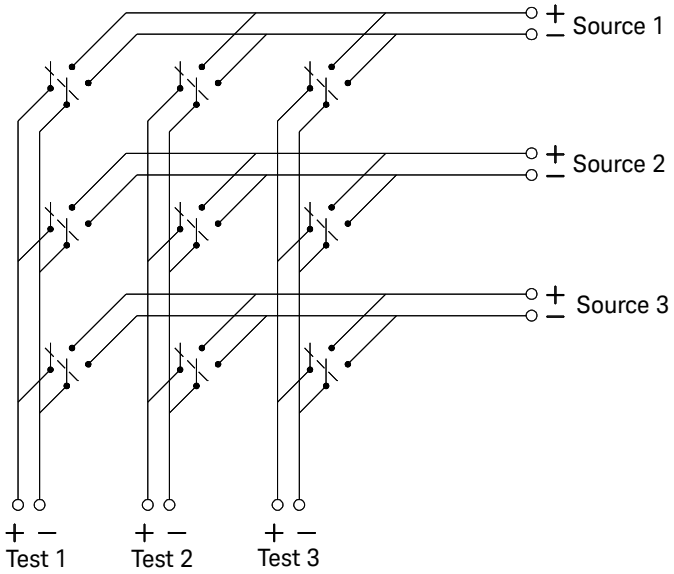

WARNING In a matrix switch configuration, any one of the signal sources can be connected to any one of the test inputs. Be aware that with a matrix, it is possible to connect more than one source at the same time. Therefore, it is important to make sure that hazardous or unwanted conditions are not created by these connections.

General Purpose Switching

You can use General Purpose (GP) switches to control power connections to your DUTs, control status indicators, or actuate external power relays or solenoids. The GP switches for the 34980A are available in two switch configurations as shown below.

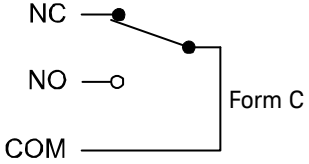

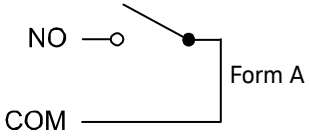

Form C switches are also called Single-Pole, Double-Throw (SPDT) and contain a normally-open (NO) and a normally-closed (NC) contact. Form A switches are also called Single-Pole, Single-Throw (SPST) and contain a normally open (NO) contact, which is either open or closed.

RF and Microwave Switching

A variety of RF and microwave switch modules are also available for the 34980A. This includes RF multiplexers (34941A, 34942A), SPDT switching from dc to 20 GHz (34946A, 34947A), and a switch/attenuator driver module (34945A) that allows you to control switches or attenuators external to the 34980A mainframe.

For more information, see "Introduction to the Plug-In Modules for the 34980A" on page 231.

CAUTION **The 34946A and 34947A support only 24 VDC coil options for the N1810 switches. If the proper voltage option (Opt. 124) is not used, the switches could be damaged. N1810 switches also require option 201 "D" subminiature connectors and option 402 Position Indicators.**

Measurement Input

The 34980A allows you to combine a DMM (either internal or external) with multiplexer channels to create a scan. During a scan, the instrument connects the internal DMM to the configured multiplexer channels one at a time and makes a measurement on each channel.

Any channel that can be "read" by the instrument can also be included in a scan. This includes any combination of temperature, voltage, resistance, current, frequency, or period measurements on multiplexer channels. A scan can also include a read of a digital port or a read of the totalizer count on the digital modules.

The Internal DMM

A transducer or sensor converts a physical quantity being measured into an electrical signal which can be measured by the internal DMM. To make these measurements, the internal DMM incorporates the following functions:

- Temperature (thermocouple, RTD, and thermistor)
- Voltage (dc and ac up to 300V)
- Resistance (2-wire and 4-wire up to 100 MΩ)
- Current (dc and ac up to 1A)
- Frequency and Period (up to 300 kHz)

NOTE **Refer to 34980A Datasheet for DMM ratings.**

The internal DMM provides a universal input front-end for measuring a variety of transducer types without the need for additional external signal conditioning. The internal DMM includes signal conditioning, amplification (or attenuation) and a high resolution (up to 22 bits) analog-to-digital converter. A simplified block diagram of the internal DMM is shown below.

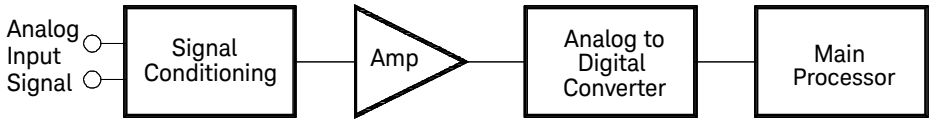

Signal Conditioning, Ranging, and Amplification

Analog input signals are multiplexed into the internal DMM's signal-conditioning section—typically comprising switching, ranging, and amplification circuitry.

- If the input signal is a dc voltage, the signal conditioner is composed of an attenuator for the higher input voltages and a dc amplifier for the lower input voltages.
- If the input signal is an ac voltage, a converter is used to convert the ac signal to its equivalent dc value (true RMS value).
- Resistance measurements are performed by supplying a known dc current to an unknown resistance and measuring the dc voltage drop across the resistor. The input signal switching and ranging circuitry, together with the amplifier circuitry, convert the input to a dc voltage which is within the measuring range of the internal DMM's analog-to-digital converter (ADC).

You can allow the instrument to automatically select the measurement range using autoranging or you can select a fixed measurement range using manual ranging. Autoranging is convenient because the instrument automatically decides which range to use for each measurement based on the input signal. For fastest scanning operation, use manual ranging for each measurement (some additional time is required for autoranging since the instrument has to make a range selection).

Analog-to-Digital Conversion (ADC)

The ADC takes a prescaled dc voltage from the signal-conditioning circuitry and converts it to digital data for output and display on the 34980A front panel. The ADC governs some of the most basic measurement characteristics. These include measurement resolution, reading speed, and the ability to reject spurious noise.

There are several analog-to-digital conversion techniques but they can be divided into two types: *integrating* and *non-integrating*. The integrating techniques measure the average input value over a defined time interval, thus rejecting many noise sources. The non-integrating techniques sample the instantaneous value of

the input, plus noise, during a very short interval. The 34980A's internal DMM uses an integrating ADC technique.

You can select the resolution and reading speed from 6 digits (22 bits) at 3 readings per second to 4 digits (16 bits) at up to 3,000 readings per second. The integration time, resolution, and number of digits are all interrelated (see "Custom A/D Integration Time" on page 145 for more details).

Main System Processor

The main system processor controls the input signal conditioning, ranging, the ADC, and all backplane transactions. The main system processor synchronizes measurements during scanning and control operations. The main system processor uses a multi-tasking operating system to manage the various system resources and demands.

The main system processor also performs Mx+B scaling operations, monitors alarm conditions, converts transducer measurements to engineering units, adds time stamp information to scanned measurements, and stores measurement data in memory.

Scanning

The instrument allows you to combine a DMM (either internal or external) with multiplexer channels to create a scan. During a scan, the instrument connects the DMM to the configured multiplexer channels one at a time and makes a measurement on each channel.

Before you can initiate a scan, you must set up a scan list to include all desired multiplexer or digital channels. Channels which are not in the scan list are skipped during the scan. By default, the instrument automatically scans the list of channels in ascending order from slot 1 through slot 8 (channels are reordered as needed). If your application requires non-ordered scanning of the channels in the present scan list, you can configure a non-sequential scan. Measurements are taken only during a scan and only on those channels which are included in the scan list.

You can store up to 500,000 readings in memory during a scan and all readings are automatically time stamped. The most recent readings are always preserved in memory. You can read the contents of memory at any time, even during a scan. Reading memory is not cleared when you read it. Each time you start a new scan, the instrument clears all readings stored in reading memory from the previous

scan. Therefore, all readings currently stored in memory are always from the most recent scan.

You can configure the event or action that controls the onset of each sweep through the scan list (a sweep is one pass through the scan list):

– You can set the instrument's internal timer to automatically scan at a specific interval as shown below.

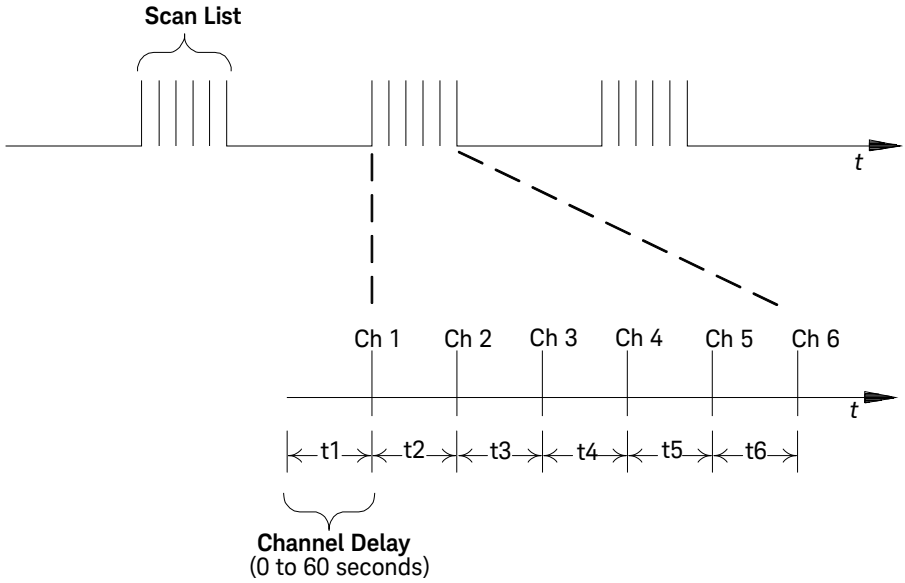

– You can also program a time delay between channels in the scan list (see "Channel Delay" on page 181).

– You can manually control a scan by repeatedly pressing the Scan (Measure) key from the front panel.

– You can start a scan by sending a software command from the remote interface (`MEASure?` or `INITiate` command).

– You can start a scan when an external TTL trigger pulse is received.

– You can start a scan when an alarm event is logged on the channel being monitored.

For more information on scanning, see "Scanning" on page 167.

Scanning With External Instruments

If your application doesn't require the built-in measurement capabilities of the 34980A, you can order the mainframe without the internal DMM. In this configuration, you can use the 34980A for signal routing or control applications. If you install a multiplexer plug-in module, you can use the system for scanning with an external instrument. You can connect an external instrument such as a DMM to the multiplexer's COM terminals (see below) or you can connect to the 34980A's analog buses.

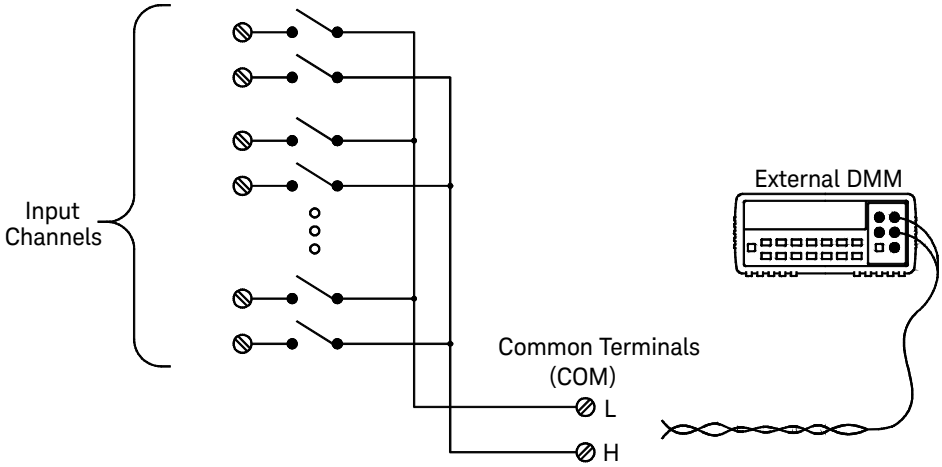

The figure below shows the external connections required to synchronize the scan sequence between the 34980A and an external instrument. The 34980A must notify the external instrument when a relay is closed and fully settled (including channel delay). The 34980A outputs a Channel Closed pulse. In response, the external instrument must notify the 34980A when it has finished its measurement and is ready to advance to the next channel in the scan list. For more information, see "Scanning With External Instruments" on page 191.

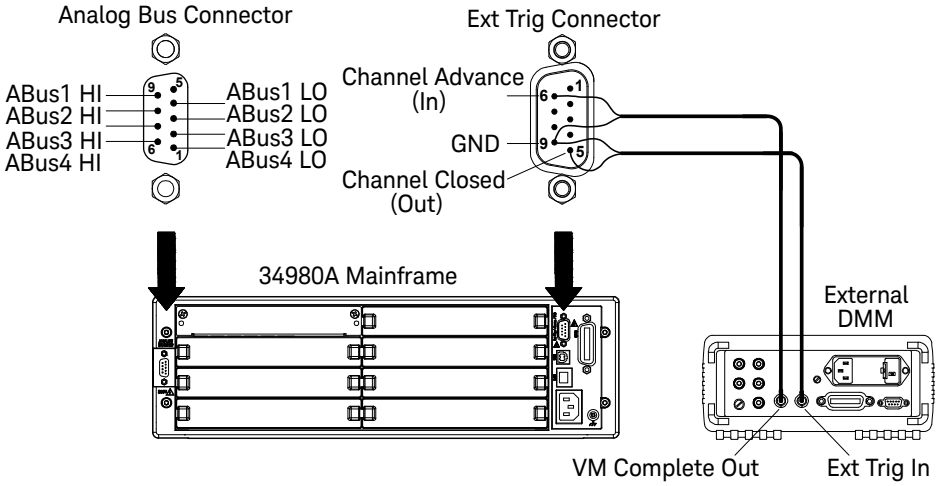

The Digital Modules

The 34950A and 34952A digital modules add two additional measurement input capabilities to the system: digital input and event totalize. For more information, see the individual User's Guides included with those modules.

Digital Input

The digital modules have multiple non-isolated 8-bit input/output ports which you can use for reading digital patterns. You can read the live status of the bits on the port or you can configure a scan to include a digital read. Each port has a separate channel number on the module and contains 8-bits. You can combine ports to read 16- or 32-bit words.

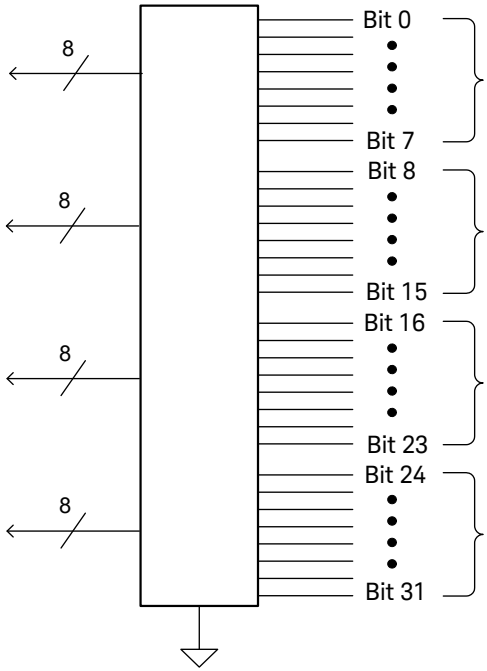

Totalizer

The digital modules have 32-bit totalizer input channels for counting pulses and measuring frequency. You can manually read the totalizer count or you can configure a scan to read the count.

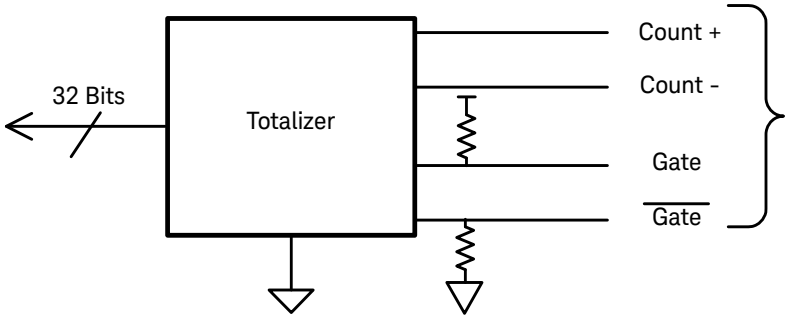

You can configure the totalizer to count on the rising edge or falling edge of the input signal. The minimum rise/fall time for input signals to the totalizer is 5 µS.

The maximum count is 4,294,967,295 (2^{32} - 1). The count rolls over to "0" after reaching the maximum allowed value.

You can configure the totalizer to read without affecting the count or reset the count to zero without losing any counts.

Control Output

In addition to signal routing and measurement, you can also use the 34980A to provide simple control outputs. For example, you can control external high-power relays using the GP switch modules or a digital output channel.

The Digital Modules

The 34950A, 34951A and 34952A digital modules add two additional measurement control output capabilities to the system: digital output and voltage (DAC) output. For more information, see the individual User's Guides included with those modules.

The digital modules also contain digital input and event totalizer capabilities which are described in more detail on page 42 and page 43.

Digital Output

The digital modules have multiple non-isolated 8-bit input/output ports which you can use for writing digital patterns. Each port has a separate channel number on the module and contains 8-bits. You can combine ports to output 16- or 32-bit words.

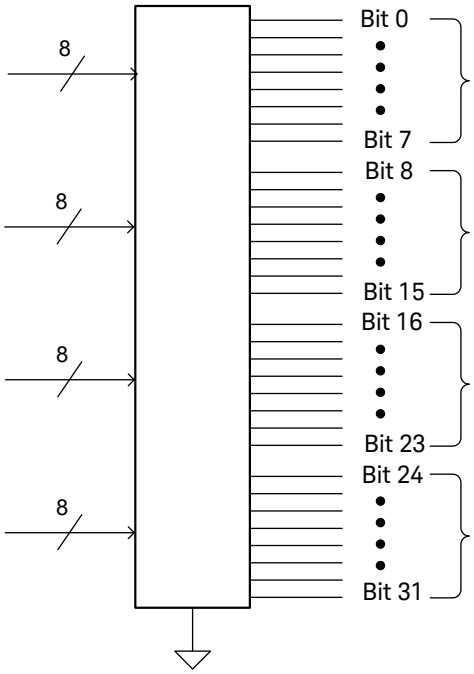

Voltage (DAC) Output

The 34951A module has four independent, isolated analog output channels that can output dc voltage up to ± 16V or dc current up to ± 20 mA. Each DAC (Digital-to-Analog Converter) channel can be used as a programmable voltage source for analog input control of other devices. A simplified diagram is shown below.

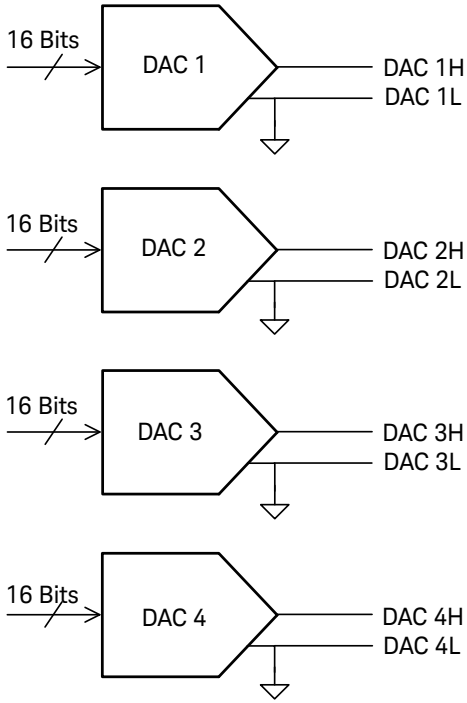

You can set the output voltage to any value between -16 Vdc and +16 Vdc, in 500 μV steps on any or all four channels.

You can set the output current to any value between -20 mA and +20 mA, in 630 nA steps on any or all four channels.

The Actuator / General-Purpose Switches

You can think of the 34937A, 34938A, and 34939A modules as a control outputs because they are often used to control external power devices. For example, the 34937A provides 28 independent, isolated Form C (SPDT) switches. Each channel can switch up to 300V dc or ac rms. Each switch can also switch up to 1A dc or ac rms up to 60VA maximum. For example, the maximum current that you can switch at 120V is 0.5A as shown below.

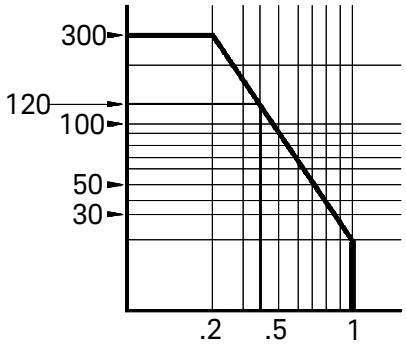

For control applications, the GP modules have the following advantages:

- Higher voltage and power rating than the digital output channels.
- The actuator switches can also be used to control power devices.

When used with high-power devices, however, it is critical that you provide protection to the switch from capacitive and inductive loads to ensure maximum relay life.

THIS PAGE HAS BEEN INTENTIONALLY LEFT BLANK.

2 Getting Started

Front Panel at a Glance 50
Rear Panel at a Glance 52
Rear Panel Connector Pinouts 54
Annunciator Display Indicators 56
Installing and Connecting Modules 58
Instrument Rack Mounting 70
Operating the 34980A from the Front Panel Keyboard 73
Connecting the 34980A to Your Computer 88
Communicating with the 34980A 98
Operating the 34980A using the Integrated Web Browser Interface 99
34980A Documentation Map 111

This chapter provides an overview of the 34980A's controls, displays and connections; module assembly, wiring and installation instructions; and some basics of operation with examples. It is designed to allow you to gain quick familiarity with the instrument and start using it.

Front Panel at a Glance

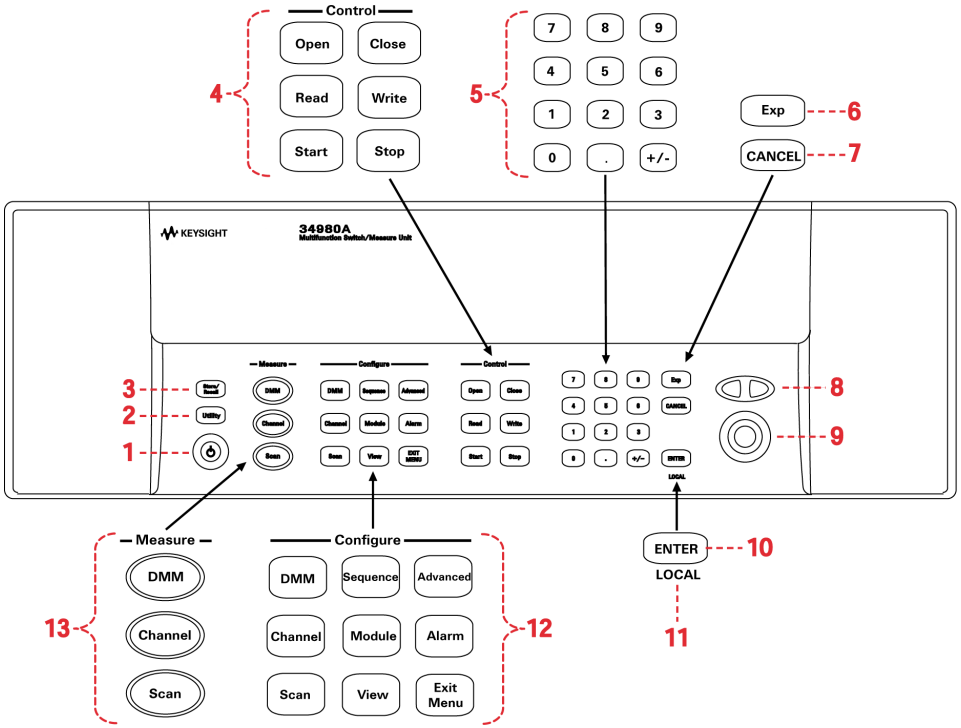

1	The On/Standby switch is used to toggle the 34980A between On and Standby modes only. To turn the unit off, remove the power cord.
2	The Utility key accesses menus to configure Remote I/O (LAN, GPIB, and USB) operation, set Date and Time, and configure other system-related instrument parameters.
3	The Store/Recall key allows you to save and recall up to six instrument setups.

CAUTION For proper instrument function, Channel monitor must be turn OFF when the state is stored and Auto recall is enabled. If the Channel monitor is turned ON, the front panel may freeze. If the front panel is frozen, all plug-in modules must be removed and the auto-recall function turned OFF to restore the instrument back to its initial working state.

4	Control keys directly control module actions.
5	The number keypad is used for entering numerical characters.
6	The exponent entry key is used to enter the exponent during a numerical entry.
7	The Cancel key exits any menu without saving changes.
8	Arrow keys move the cursor position in an entry.
9	The knob provides for entry of alphanumeric characters, selecting slots or channels, and navigating menus.
10	The Enter key steps you through a menu or saves number entries.
11	Running a program puts the display into “remote” and disables the front panel keys. Local takes you out of “remote” mode and enables the front panel keys.
12	Configure keys select functions and set function parameters.
13	Measure keys execute and monitor measurements. Depending on which measurement key you use, you can have complete/direct control over the switching and measurement operation, or you can have the 34980A automatically control these to capture the desired data.

Rear Panel at a Glance

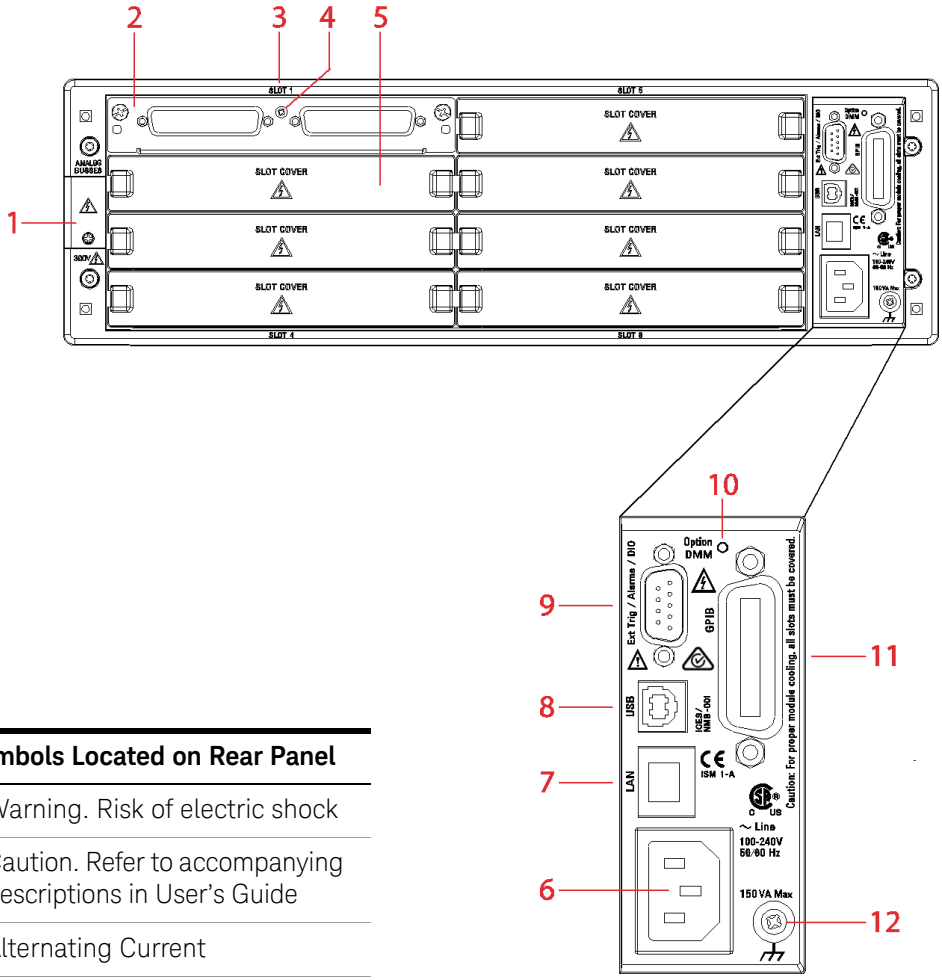

Safety Symbols Located on Rear Panel	
⚠	Warning. Risk of electric shock
⚠	Caution. Refer to accompanying descriptions in User's Guide
∿	Alternating Current
⏚	Mainframe Chassis Ground

1	Access to Analog Buses (shown with removable cover installed). For pinouts, see page 55.
2	Module installed in slot 1
3	Slot identifier

4	Module ground screw
5	Slot cover over slot 2
6	AC power connector
7	LAN connector (10Base T/100Base Tx)
8	USB 2.0 connector
9	External trigger input. For pinouts, see page 54.
10	Internal DMM option mark. If you ordered the internal DMM option, the circle is marked black.
11	IEEE 488.2 GPIB Connector
12	Chassis ground screw

Rear Panel Connector Pinouts

External Trigger/Alarms Connector (Male D-Sub)

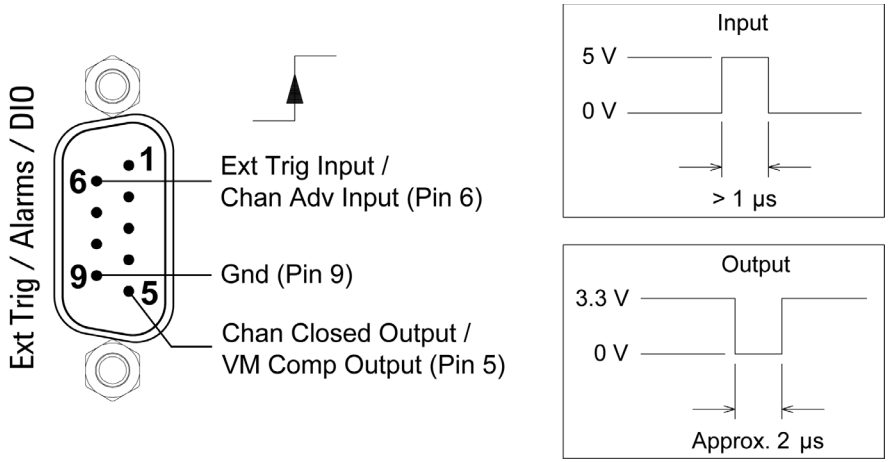

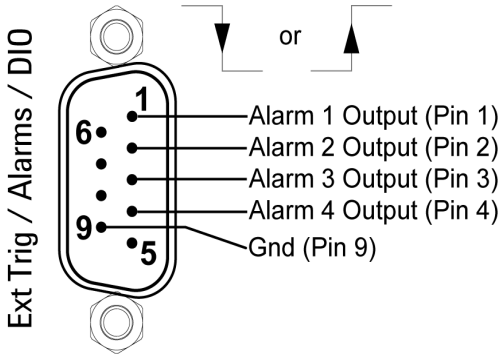

Analog Bus Connector (Female D-Sub)

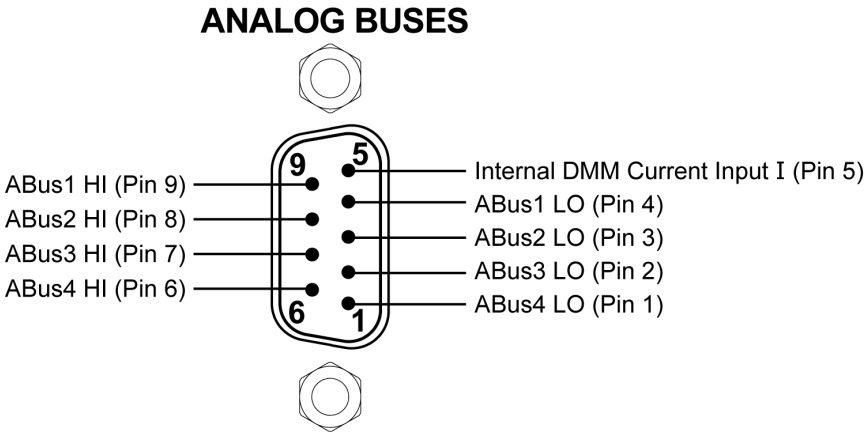

Annunciator Display Indicators

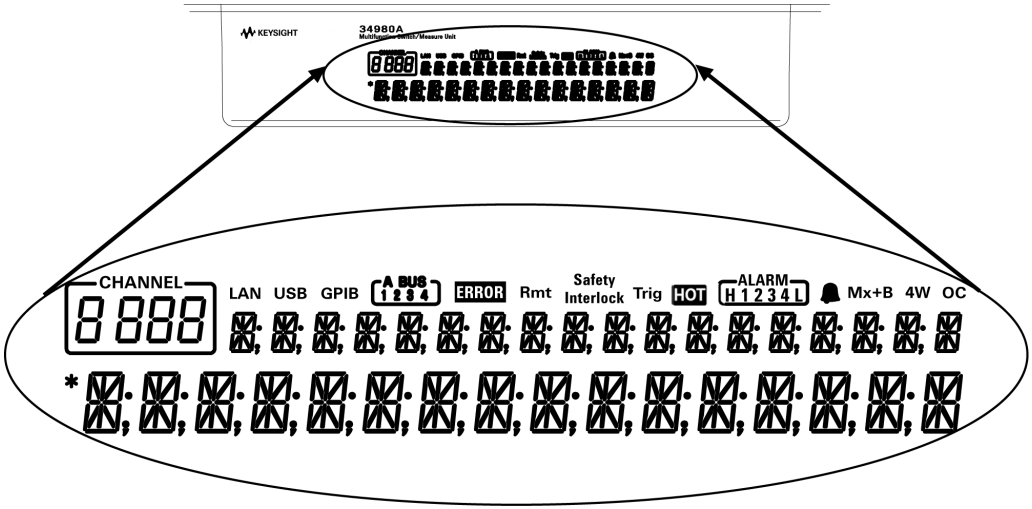

Display Indicator	Definition
LAN	Lit when communicating with the 34980A over LAN.
USB	Lit when communicating with the 34980A over USB.
GPIB	Lit when communicating with the 34980A over GPIB.
ABUS [1234]	Indicates Analog Bus (ABus) connectivity. Normally, this shows the designated ABus connected on any module in the mainframe. During a scan, if ABus 1 and ABus 2 are *both* indicated, they will be used at some point during that scan.
ERROR	When lit, an error has been generated and is in the error queue.
Rmt	Indicates Remote mode is in use. Running a program puts the display into “remote” mode and disables the front panel keys. Pressing the LOCAL button takes you out of “remote” mode and enables the front panel keys.
Safety Interlock	Indicates an ABus Safety Interlock. When lit, at least one terminal block or cable has been removed from the D-sub connector of a module. For more information, see page 149 and the User’s Guides for the appropriate Multiplexer Modules.
Trig	Lit when the 34980A is waiting for an external or manual trigger during scans.

Display Indicator	Definition
HOT	Indicates an over-temperature condition. When lit, one or more general purpose (34937A/34938A) modules have reached their over-temperature limits.
ALARM (H1234L)	A HI or LO alarm condition has occurred on the indicated alarms.
🔔	Alarms are enabled on the displayed channel.
Mx+B	Scaling is enabled on the displayed channel. This appears on display after you have selected the scaling function via the front panel or remote interface.
4W	A 4-wire measurement is specified on the displayed channel. This appears on the display after you have selected the 4-wire function via the front panel or remote interface.
OC	Lit when Offset Compensation has been specified for a given measurement. This appears on the display after you have selected the offset compensation function via the front panel or remote interface. For more information, see "Offset Compensation" on page 160
*	A measurement is in progress.

Installing and Connecting Modules

For most applications, prior to using the 34980A you will select and install modules, and make connections with terminal blocks or cabling. The following sections illustrate module and terminal block installation.

WARNING Removal of the instrument's cover is to be conducted by qualified personnel only. Only qualified, trained personnel who are aware of the hazards involved should remove instrument covers. Prevent operators from accessing any external circuits, test fixtures, cables or wherever hazardous voltages may be present. Failure to recognize and observe normal safety precautions could result in personal injury or death.

WARNING Under certain conditions, hazardous voltage levels capable of causing injury or death may remain even after external circuits have been disconnected. To avoid electrical shock, remove the main power cord from the 34980A and ensure all connections to the DUT, including field wiring to the instrument and the analog bus (if present) are deenergized and all circuits are discharged before coming in contact with the system. Ensure no hazardous voltages remain on any accessible before handling any part of the instrument and test setup, making connections to the system, removing covers or cleaning the instrument.

WARNING

HIGH ENERGY SOURCES

The Analog Buses are designed to handle inputs up to their rated currents or their rated powers, whichever is less. Under certain fault conditions, high energy sources could provide substantially more current or power than the instrument can handle. It is important to provide external current limiting, such as fuses if the inputs are connected to high-energy sources. The overcurrent protection is to be rated for the maximum available short circuit current of the hazardous sources. Ensure that the current limiting devices / snubber circuits are appropriate for the signal being tested. Failure to do so may result in hazardous conditions such as fire or shock and could lead to personal injury or death. Refer to Chapter 5 for the current limiting graphs of 34890A.

Removing a Slot Cover

Your 34980A is shipped from the factory with one slot uncovered and the remaining seven slots covered (the illustration below shows a module already inserted in Slot 1). When you are ready to install additional modules in the seven remaining slots, you must first remove its slot cover. Using a flat blade screwdriver, pry each side of the slot cover until the cover releases from the slot.

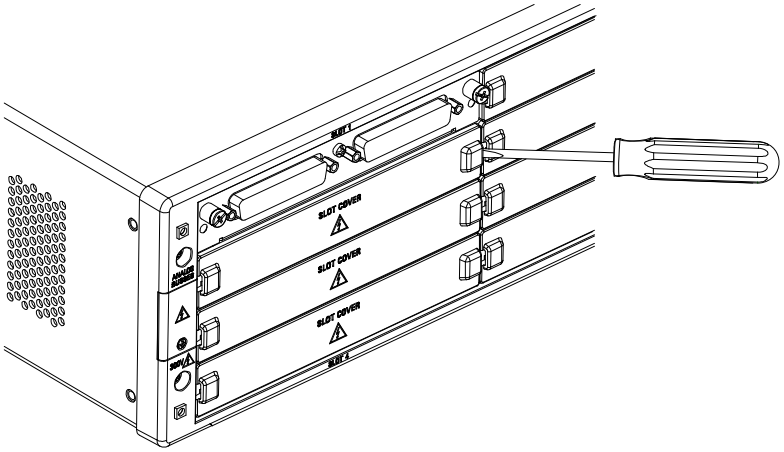

CAUTION Do not block air intake or exhaust vents at the sides of the instrument.

With the slot cover removed, you can now install a module in this slot.

For detailed examples of the slot and channel numbering scheme used in the 34980A, see "Slot and Channel Addressing Scheme" on page 235.

Installing a Module

NOTE *Applies to the multiplexer and matrix modules only* – The Safety Interlock feature prevents connections to the Analog Buses from a module if a terminal block or properly-wired cable is not connected to that module. If proper connections are not present, the Analog Bus relays will be disabled on that module and the front panel **Safety Interlock** display annunciator will turn on.

Installing a Module for Use with Cables

If you are planning to use an optional terminal block to connect your external wiring, skip to the next section. If you are planning to use cables for your external connections, follow the procedure below to install a plug-in module.

WARNING

External Wiring for Hazardous Voltages:

To ensure minimum safety insulation when wiring with hazardous voltages, ensure all wiring (both internal and external to the instruments):

- follow (USA) NFPA 79 Table 12.5.1 Conductor Ampacity and 12.5.5(a) Ambient Temperature Correction Factors (or equivalent National Code requirements) when selecting the AWG required.
- are rated for at least 2 x the maximum applied voltage of the external source or any interconnecting system modules or external connections.
- flame rated minimum:
  - Wires and cables with overall cross-sectional area of the conductors exceeding 0.5mm^2 meet test of IEC 60332-1-2 (IEC); or
  - Wires and cables with overall cross-sectional area of the conductors of 0.5mm^2 or less, the test of IEC 60332-2-2 (IEC); or
  - FT-1 of CSA C22.2 No. 0.3 (Canada); or
  - VW-1 of UL 1581 (US).
- temperature rated for the application.
- classified and suitable to be used external to the enclosure:
  - AWM Class II B or A/B – external/interconnecting wires (single- or multiple-conductor constructions with a jacket) and potentially subject to mechanical abuse (Canada)
  - AWM Style Use – external interconnection of electronic equipment or appliances (US)

WARNING

Do not use the instrument if it is damaged. Before use, inspect the instrument and all connections. Pay particular attention to the insulation surrounding the connectors and / or cable assembly insulation. NEVER use a cable showing any signs of damage. Faulty cables can cause electrical shock and /or fire hazards and could lead to personal injury or death.

1 Install the module into a mainframe slot until it fully seats with the backplane connector.

2 Using a Pozidriv #1 screwdriver, tighten the two screws to secure the module in the mainframe. The recommended tightening torque is 5 in-lbs. Installation is now complete.

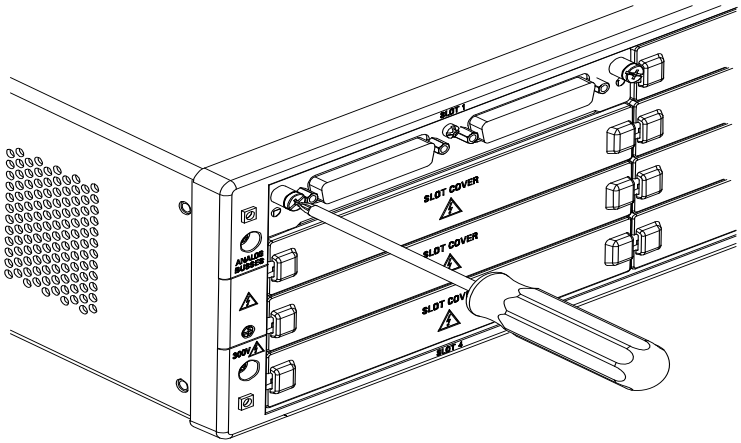

Installing a Module for Use with Terminal Blocks

All of the 34980A plug-in modules, except the RF and microwave modules, can be used with a compatible terminal blocks (optional accessories 349xxT), which provide screw terminals or solder cup connections for your external wiring. If you plan to use an optional terminal block, follow the procedure below to install the module:

1 Using a Pozidriv #1 screwdriver, remove the panhead grounding screw located between the module connectors.

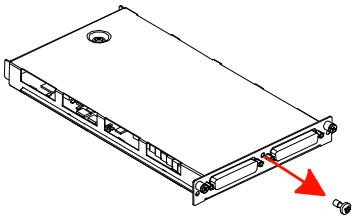

2 Remove the two flathead screws from the support sleeve.

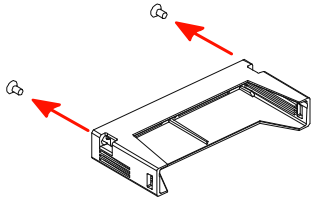

3 Fit the terminal block support sleeve against the module so the openings on the sleeve line up with the connectors and the center screw hole as shown.

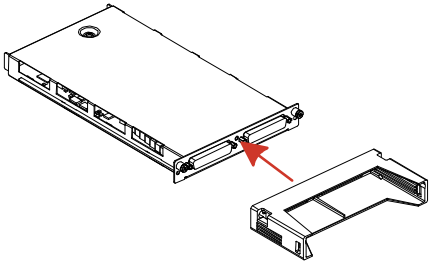

4 Replace the panhead screw. Then replace and tighten the two flathead screws to secure the sleeve to the module.

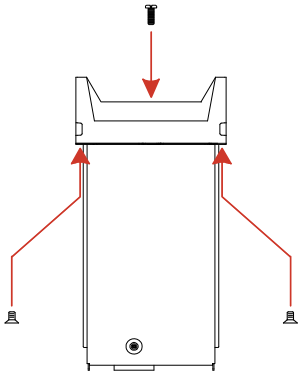

5 Install the module into a mainframe slot until it fully seats with the backplane connector. Using a Pozidriv #1 screwdriver, tighten the two screws to secure the module in the mainframe. Installation of the support sleeve is now complete.

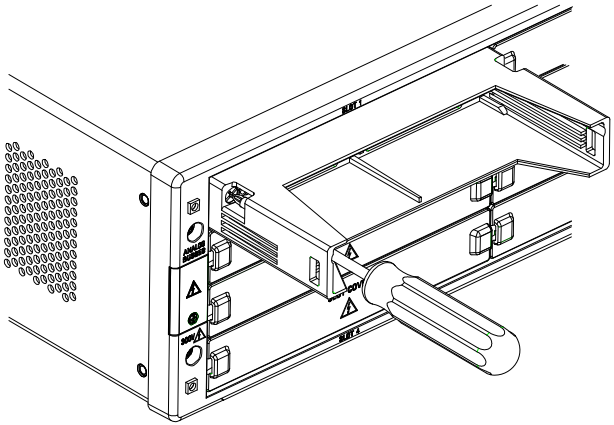

Wiring and Installing a Terminal Block

If you are planning to use an optional terminal block with your plug-in modules, follow the next two procedures to connect your external wiring and install a terminal block.

WARNING Before you begin this task, make sure you have disconnected power from all external field wiring you will be connecting to the terminal block.

WARNING Terminal block wiring: Failure to follow the instructions below could result in equipment damage and may result in hazardous conditions such as fire or shock and could lead to personal injury or death.

Wiring of the terminal block must be performed by qualified persons. A MAXIMUM of 5 mm of conductor insulation is to be removed. All wire strands must be appropriately inserted in the connector housing. The screw connections must be sufficiently secured to prevent accidental loosening.

Never operate the instrument without the terminal block covers securely installed. Use caution to prevent operators from accessing any external circuits, test fixtures, cables or whenever hazardous voltages may be present.

WARNING

External Wiring for Hazardous Voltages:

To ensure minimum safety insulation when wiring with hazardous voltages, ensure all wiring (both internal and external to the instruments):

- follow (USA) NFPA 79 Table 12.5.1 Conductor Ampacity and 12.5.5(a) Ambient Temperature Correction Factors (or equivalent National Code requirements) when selecting the AWG required.
- are rated for at least 2 x the maximum applied voltage of the external source or any interconnecting system modules or external connections.
- flame rated minimum:
  - Wires and cables with overall cross-sectional area of the conductors exceeding 0.5mm^2 meet test of IEC 60332-1-2 (IEC); or
  - Wires and cables with overall cross-sectional area of the conductors of 0.5mm^2 or less, the test of IEC 60332-2-2 (IEC); or
  - FT-1 of CSA C22.2 No. 0.3 (Canada); or
  - VW-1 of UL 1581 (US).
- temperature rated for the application.
- classified and suitable to be used external to the enclosure:
  - AWM Class II B or A/B – external/interconnecting wires (single- or multiple-conductor constructions with a jacket) and potentially subject to mechanical abuse (Canada)
  - AWM Style Use – external interconnection of electronic equipment or appliances (US)

NOTE

For plug-in module pinout diagrams and additional information, refer to the User's Guide(s) of the module(s).

Wiring a Terminal Block

1 To remove the terminal block cover, insert a screwdriver through the hole in the cover as shown. Gently push the tab in the direction of the arrow.

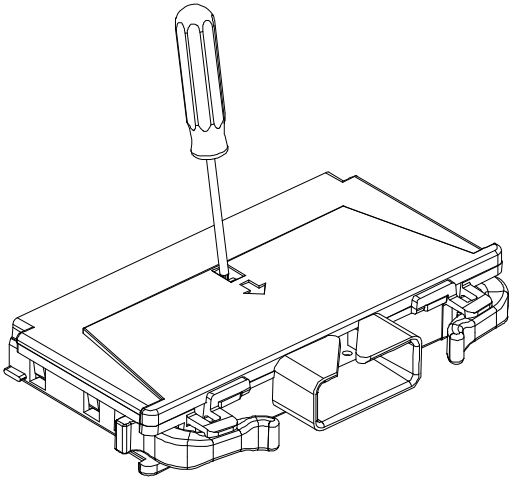

2 While pushing the tab (Step 1), lift the clear plastic cover from the edge near the D-sub connectors. Slide the cover from under the tab holders and remove the cover.

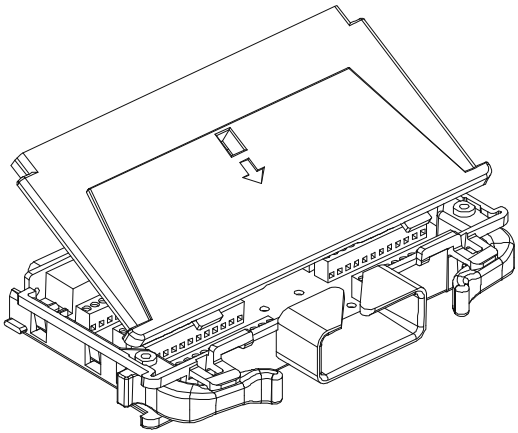

3 Make connections to the individual terminals as appropriate. Use a suitable wire type, gauge and insulation for your application. Use a 2.5 mm cable tie as shown for additional strain relief.

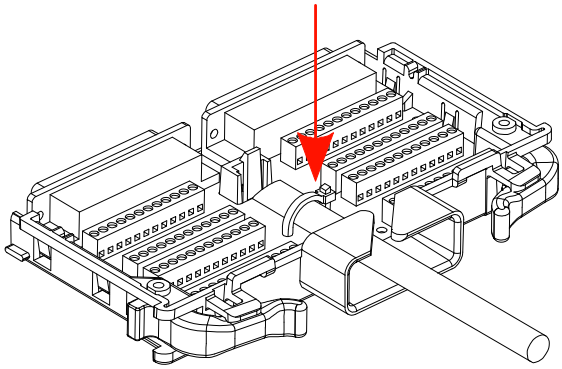

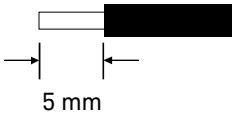

WARNING **Always include wiring strain relief to reduce strain on the connections. Failure to do so may result in hazardous conditions such as fire or shock and could lead to personal injury or death.**

4 To replace the terminal block cover, slide the cover tabs into the tab holders on the terminal block as shown. Press down on the cover until it snaps securely into place. Continue with the next section to install the terminal block to the module.

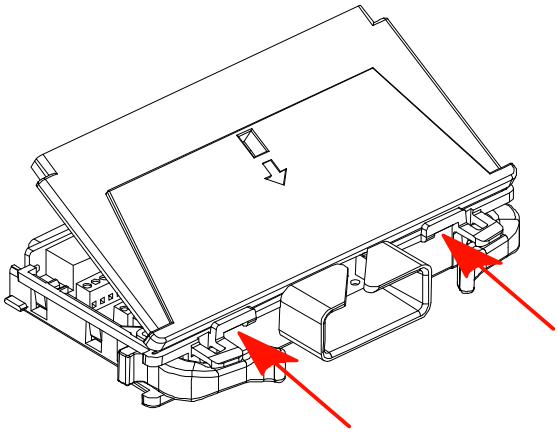

Installing a Terminal Block

After making external wiring connections to a terminal block, follow the procedure below to fasten the block to a plug-in module.

1 Push the levers on the terminal block to the fully-open position as shown below. Then slide the terminal block into the instrument-mounted support sleeve...

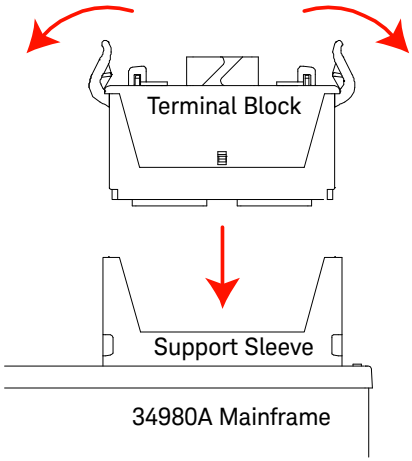

...until the terminal block stops at the two points indicated by the arrows below.

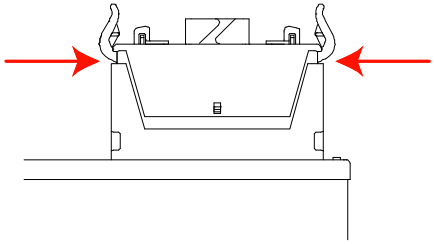

2 Carefully rotate the levers upward as shown...

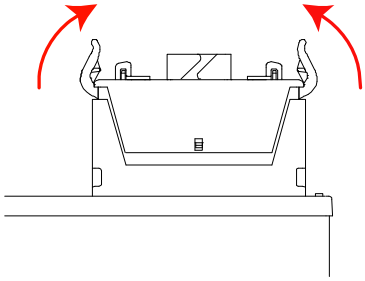

...until both levers are locked in the closed position.

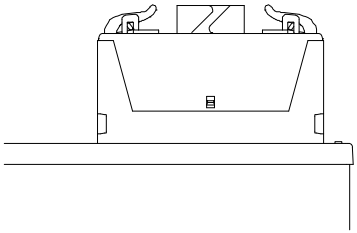

Instrument Rack Mounting

The Keysight 34980A Mainframe can be mounted in a standard 19 inch instrument rack or in an Keysight rack cabinet. Orientation can be either forward mounted (front panel facing the front of the cabinet) or reverse mounted (rear panel facing the front of the cabinet).

Either method will require a set of cabinet rails to support the instrument's weight and planned orientation, and a set of mounting brackets to secure the unit to the cabinet.

Keysight-supplied rail kits are available for Keysight cabinets only; for all other racks contact the rack's vendor. The following rack mounting kits and rail kits are available from Keysight:

Keysight Part	Kit Contents
Y1130A Rack Mount Kit	2 short brackets for forward mounting, 2 longer brackets for reverse mounting, and associated hardware
Standard Rack Mount Kit, part number 5063-9214	2 short brackets for forward mounting and associated hardware
E3663A Basic Rail Kit	2 rails and associated hardware for forward mounting in an Keysight cabinet
E3664AC Third Party Rail Kit	2 rails and associated hardware for reverse mounting in an Keysight cabinet

– For *forward* rack mounting, use the short brackets from the Keysight Standard rack mount kit or Y1130A Rack Mount Kit. For Keysight rack cabinets, use the E3663A Basic Rail Kit.

– For *reverse* rack mounting use the longer brackets (see figure below) from the Y1130A Rack Mount Kit. For Keysight rack cabinets, use the E3664AC Third Party Rail Kit.

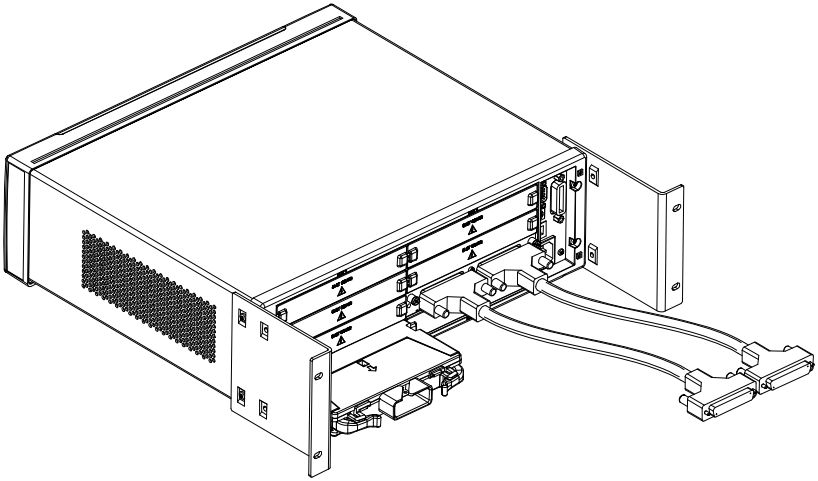

Keysight 34980A (shown with Reverse Rack Mount brackets installed)

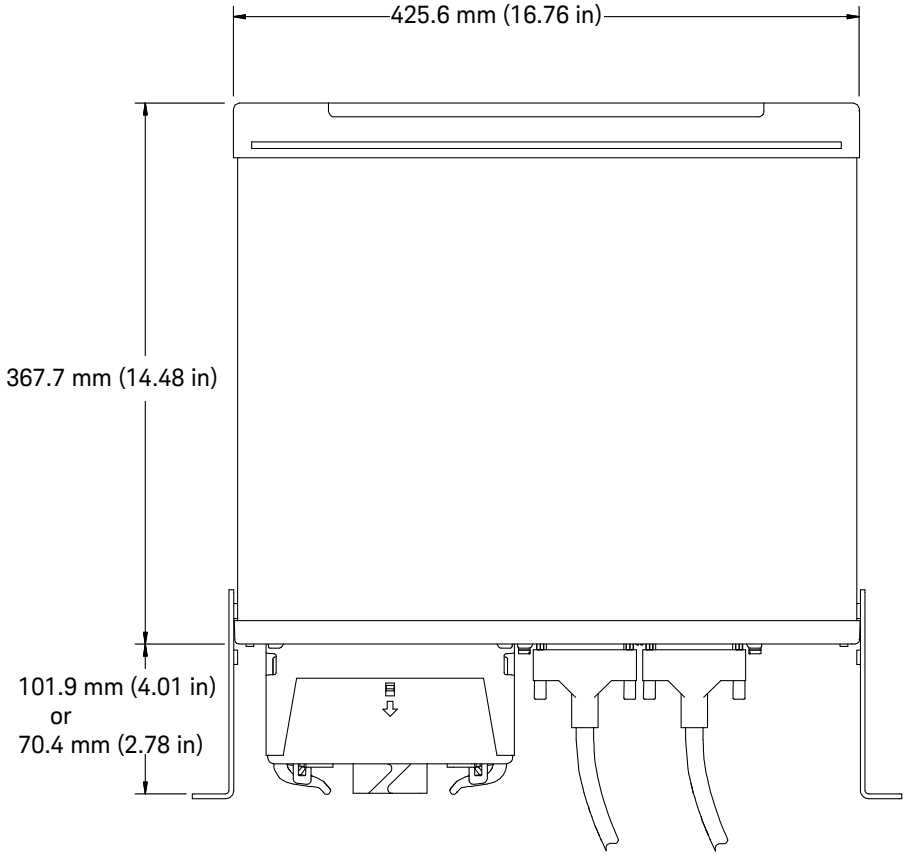

Keysight 34980A Dimensions (shown with Reverse Rack Mount brackets installed)

Operating the 34980A from the Front Panel Keyboard

This section gives an overview on operating the 34980A from the front panel keyboard. The Front Panel Menu Reference subsection briefly describes the menus accessed by the front panel keys, and the subsequent subsections provide examples of menu navigation.

NOTE **Before you can operate the front panel keyboard, connect the power cord to the 34980A and turn on the power. If the instrument does not power on properly, contact Keysight Technologies Technical Support.**

At power on, all segments on the front panel are displayed and all lighted keys temporarily turn on. The front panel is ready for operation when the keys are no longer lit and the green channel field on the display shows the first slot in which a module is installed.

Front Panel Menu Reference

This subsection provides an overview of the top two levels of menus you can access from the front panel. The menus are designed to sequentially guide you through all parameters required to configure a particular function or operation.

The Store/Recall Menu (Store / Recall) *Use to store and recall instrument states. You can:*

- Store up to six instrument states in non-volatile memory;
- Assign a name to each storage location;
- Recall stored states, the power-down state, the factory reset state, or a preset state.

CAUTION **For proper instrument function, Channel monitor must be turn OFF when the state is stored and Auto recall is enabled. If the Channel monitor is turned ON, the front panel may freeze. If the front panel is frozen, all plug-in modules must be removed and the auto-recall function turned OFF to restore the instrument back to its initial working state.**

The **Utility** menu (Utility) *Use to configure system-related instrument parameters. You can:*

- Connect and configure the 34980A to use over LAN, GPIB, or USB;
- Set the real time clock and calendar;
- Set the radix character and thousand separator;
- Enable/disable the internal DMM;
- Query and update the firmware revisions for the mainframe and its modules.

Measurement configuration parameters are set using the Configure key group (see descriptions on page 74)

Configure Key Group

Use these menus to set measurement parameters.

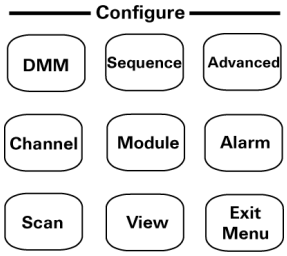

The **DMM** Menu

- Set the internal DMM's measurement function (AC volts, DC volts, AC current, DC current, 2-wire ohms, 4-wire ohms, temperature, frequency, and period)
- Set measurement function parameters

The **Channel** Menu

- Set channel measurement function (AC volts, DC volts, AC current (34921A only), DC current (34921A only) 2-wire ohms, 4-wire ohms, temperature, frequency, and period)
- Set measurement function parameters

The **Scan** Menu

- Set trigger-in parameters
- Set sweep count
- Set sample count

Sequence

The **Sequence** Menu

- View a sequence command string
- Execute the sequence
- Delete sequence definitions

Module

The **Module** Menu

- Open all relays
- Clear all measurement functions
- Clear channel labels
- Configure external trigger and clock (applies only to 34951A module)
- Set trace or level mode (applies only to 34951A module)
- Set waveform parameters (applies only to 34951A module)

View

The **View** Menu

- View errors and alarms

Advanced

The **Advanced** Key

This key is reserved to operate advanced functions in a future firmware release. When activated, you will be notified in the release notes accompanying the enabling firmware revision.

Alarm

The **Alarm** Menu

- Select one of four alarms to report alarm conditions on the displayed channel
- Configure a high limit, a low limit, or both for the displayed channel
- Select the slope (rising or falling edge) for the four alarm output lines

Exit Menu

The **Exit Menu** Key

Press to leave the current menu, saving all changes made in that menu

Menu Example 1: Setting the Time and Date

In this example, you will learn the fundamentals of using the 34980A front-panel menus by setting the date and time. Begin by pressing the **Utility** menu key, then use the **Utility** key, knob and arrow keys to navigate the menu as shown below. Follow the menu prompts as they are displayed.

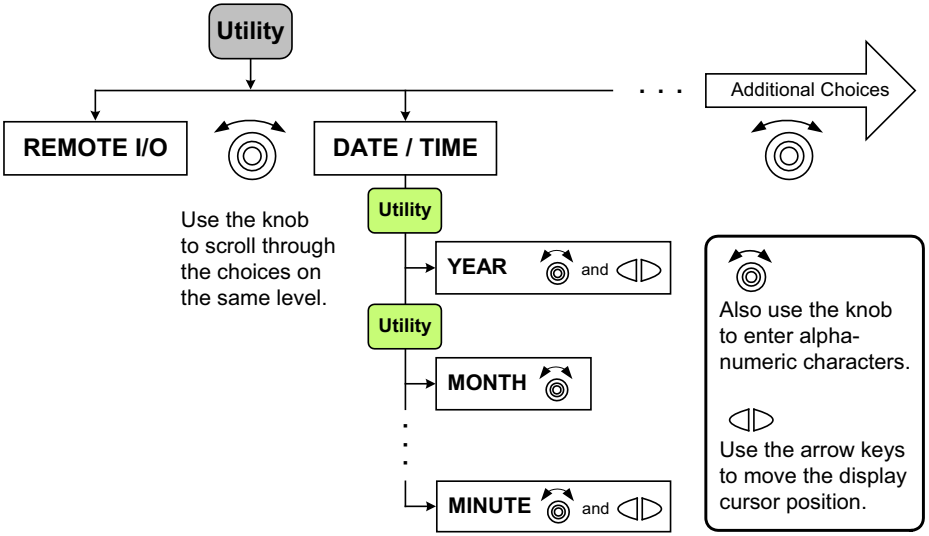

A list of menu navigation hints is provided below:

- The navigation structure of the front panel menus is hierarchical, and the menus are self-guiding; as you use the front panel, you may be prompted to enter specific parameters. The menu key in use (e.g. **Utility**) will be backlit to indicate that you must select a parameter or that additional parameters are required in that menu.
- To select another choice (other than the one displayed) at a given menu level, turn the knob.
- To select a displayed parameter and move to the next parameter, press either the lighted menu key (e.g. **Utility**) or **ENTER**.
- To save changes, keep other parameters at their same value, and immediately exit the menu, press **EXIT MENU**.
- To exit a menu without saving any changes, press **CANCEL** (located next to the number keypad).

- To select slots and channels so they appear in the green channel field, use the knob. To enter alphanumeric characters, use the knob. To enter numbers, use the number keypad or the knob.
- To move the display cursor position, use the left and right arrow keys.
- When you have entered all required parameters, the lighting on the menu key will turn off.

Menu Example 2: Opening and Closing Channel Relays

This example is applicable for use with any of the multiplexer modules (34921A, 34922A, 34923A, 34924A, or 34925A); it illustrates a 34921A module installed in slot 1.

WARNING When working with hazardous voltage levels, intentional closing of multiple bus and channel relays could cause a potential shock hazard on external connections. Use extreme caution when handling, testing and adjusting this instrument. Do not perform these procedures unless qualified to do so. Failure to recognize and observe normal safety precautions could result in personal injury or death.

1 Using the number keypad, press **1** to select the slot containing the multiplexer module.

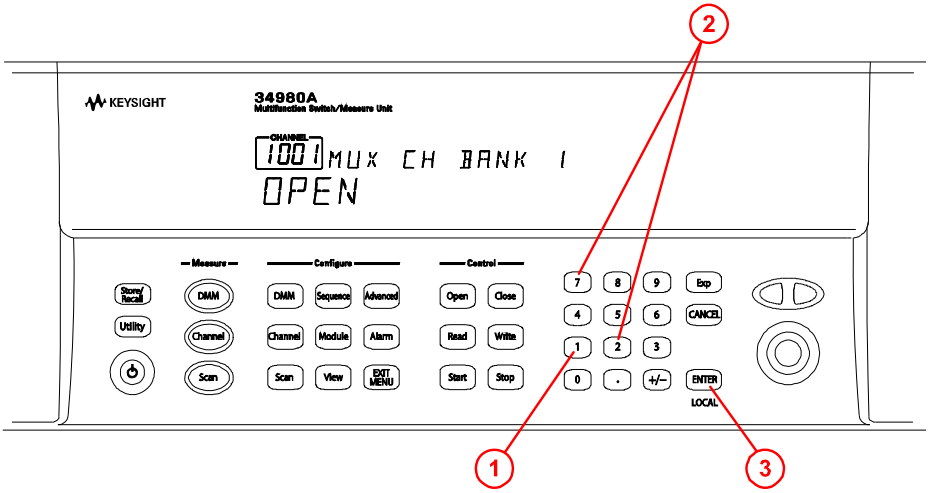

2 Select channel 27 on the module by pressing **2** and then **7**.

3 Press the lighted **ENTER** key to complete your channel selection.

4 With channel 1027 selected (shown in green channel field on display), toggle the **Close** and **Open** keys to close and open the selected channel. Note that the display shows **OPEN** or **CLOSED**, indicating the status of the channel.

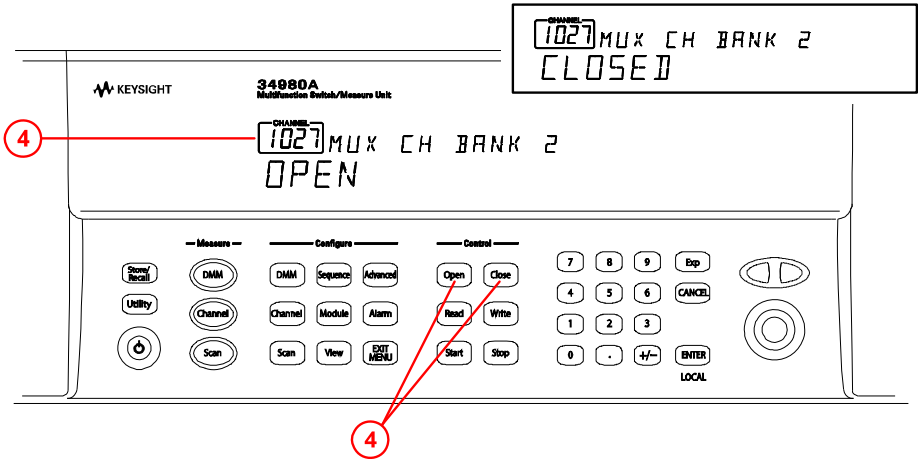

Using the Measure Keys

In Menu Examples 2 and 3 (the following two subsections), you will use keys in the front-panel Measure group. The three keys in the Measure group control the initiation of measurements (conversely, the menu keys in the Configure group allow you to set parameters for measurements). Depending on which measurement key you select, you can have complete/direct control over the switching and measurement operations, or you can allow the 34980A to automatically control the measurement to capture the desired data.

The three keys in the Measure group are:

— Measure —

– **DMM** – When pressed, the internal DMM takes continuous measurements on whatever signal you have routed to it. This mode allows the most flexibility, but you must manually control the opening and closing of relays.

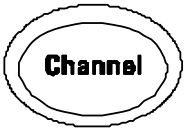

– **Channel** - When pressed, the 34980A controls the relays needed for the internal DMM to make continuous measurements on a single selected channel. The measurement configuration used for a particular channel (as specified in the Channel menu in the Configure group) is stored and recalled whenever you select that channel.

– **Scan** - When pressed, the 34980A controls all the relays required to make a series of sequential measurements, even across multiple channels with unlike measurement functions. Scan takes the measurements and stores the results in volatile memory.

Menu Example 3: Configuring the DMM for a Measurement

This example uses the internal DMM for a measurement. It can be used with any of the multiplexer modules (34921A, 34922A, 34923A, 34924A, or 34925A). If you have disabled your internal DMM, don't have one installed in your 34980A, or are not using a multiplexer module, skip this example.

1 Make sure you have a multiplexer module installed in slot 1. Select any channel on this module (the channel number is shown in green channel field on display).

2 *Within the Configure key group*, press **DMM** to set the measurement parameters for the internal DMM. Note that the **DMM** key lights.

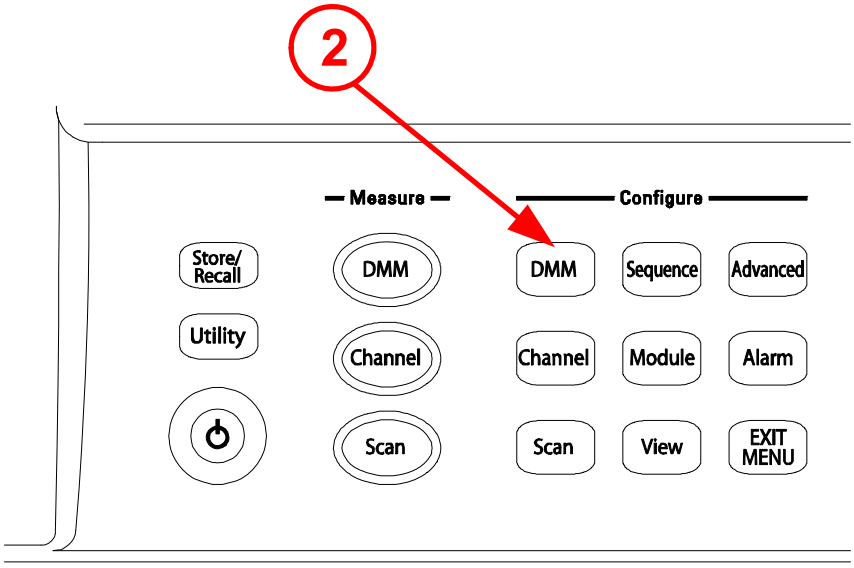

3 Using the knob to navigate through the menu choices, select the **AC VOLTS** function.

4 Press the lighted **DMM** key to accept the ac voltage function.

5 Using the knob, select **10V**, which indicates the range parameter for ac voltage.

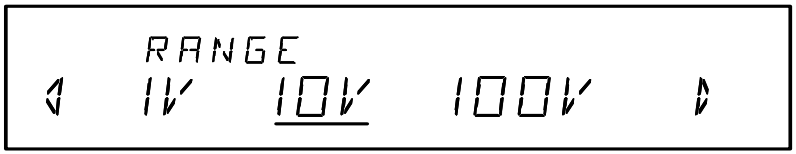

6 Press **EXIT MENU** to save your selections (ac voltage, 10 volt range) and immediately exit the menu. All unmodified parameters within the menu remain unchanged.

7 *Within the Measure key group*, press **DMM**.

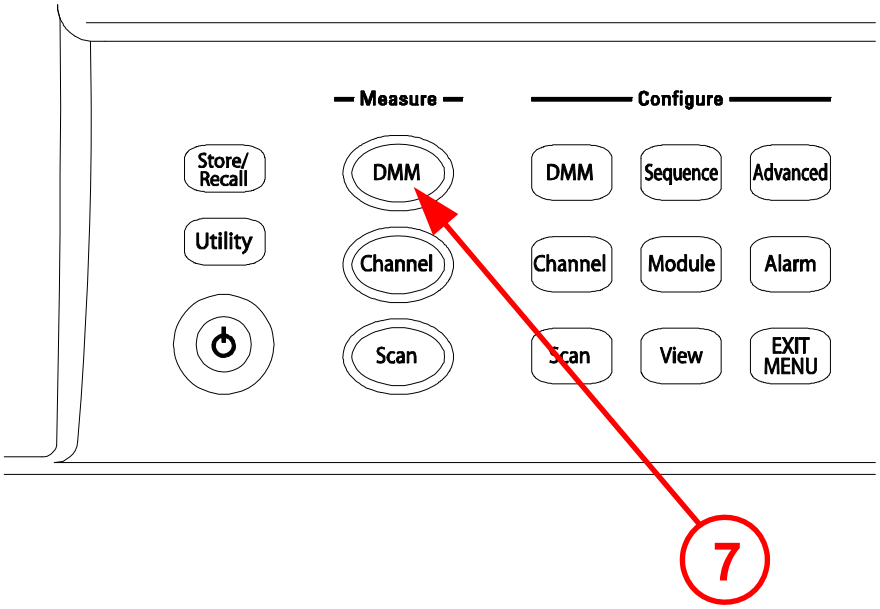

Note that the key lights and continuous ac voltage measurements are made using the internal DMM.

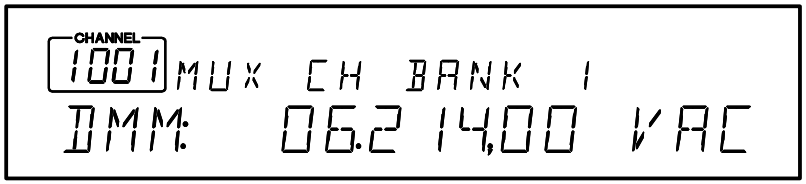

8 To stop the measurements, press **DMM** (*in the Measure key group*).

During This Tutorial Example:

- You configured the internal DMM for ac voltage measurements,
- You started measurements, viewed continuous measurement results, and stopped the measurements.

Since you didn't open or close any channels, no module or Analog Bus relays were exercised in this example. The internal DMM acted as a stand-alone instrument and measured whatever ac voltages happened to be present on the Analog Buses. Pressing **DMM** (*in the Measure key group*) also allowed you to continuously monitor measurements on the front panel.

Menu Example 4: Configuring a Channel for a Measurement

This example uses the internal DMM for a measurement. It can be used with any of the multiplexer modules (34921A, 34922A, 34923A, 34924A, or 34925A). If you have disabled your internal DMM, don't have one installed in your 34980A, or are not using a multiplexer module, skip this example.

1 Make sure you have a multiplexer module installed in slot 1.

2 Using the knob to navigate or using the number keypad, select Channel **1016** (the green channel field displays 1016).

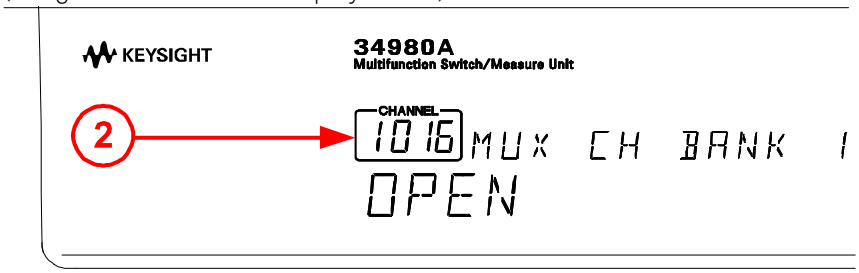

3 Press **Channel** (*in the Configure key group*) to access the configure menu for Channel 1016. Note that the Channel key lights while in the menu.

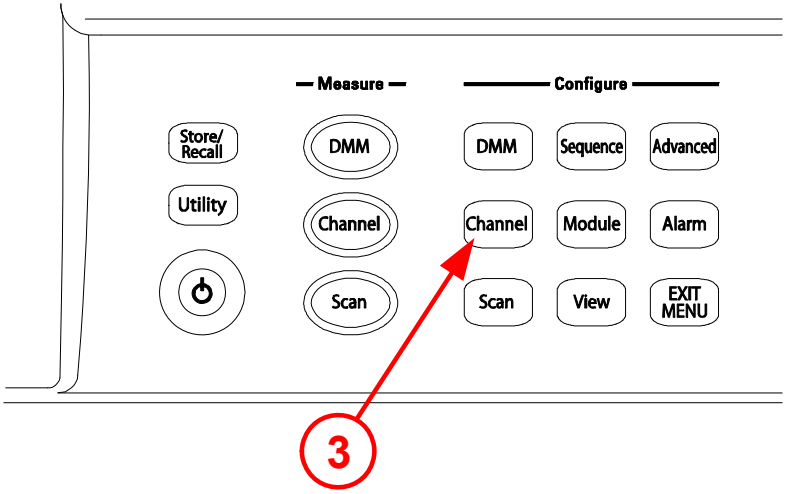

4 Using the knob to navigate through the menu choices, select the **DC VOLTS** function.

```
CHANNEL
1016 DMM MEASUREMENT
 <     DC VOLTS     >
```

5 Press the lighted **Channel** key to select this function and proceed to the next parameter in the menu.

6 Use the knob to select the **100 mV** range for the dc voltage function.

```
CHANNEL
1016 RANGE
   100mV     1V    10V  >
```

7 Continue pressing the lighted **Channel** key until **CHANNEL LABEL** is shown.

```
CHANNEL
1016 CHANNEL LABEL
 ^
```

8 At the **CHANNEL LABEL** choice, use the knob (to select alphanumeric characters) and the arrow keys (to select the cursor position) to enter a custom channel label.

```
CHANNEL
1016 CHANNEL LABEL
MY_LABEL
```

9 Press the lighted **Channel** key to save the assigned channel label and all other changes you made.

```
CHANNEL
1016 CHANGE SAVED
```

10 Press the **Channel** key (*in the Measure key group*). Note that the key lights, the required relays automatically close, and dc voltage measurements begin.

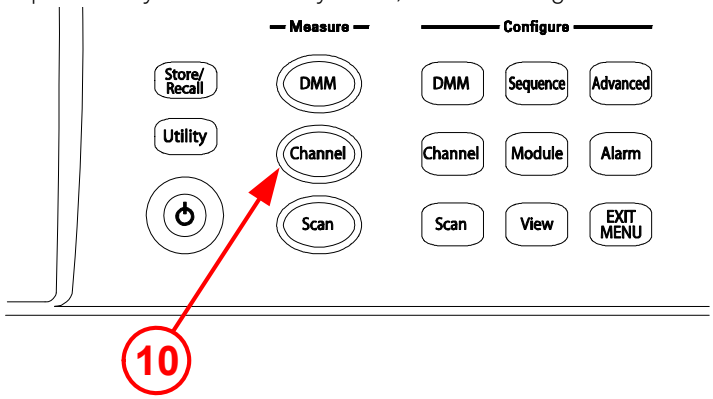

11 To stop the continuous measurements, press **Channel** again. Note that as you press Channel, you will hear the relays automatically opening.

12 Using steps 1 through 6 on the previous page, set the following configuration for Channel 1014 (for this example, don't change any other measurement parameters):

- Channel: **1014**
- Measurement Function: **AC Volts**
- Range: **1V**

13 Press **EXIT MENU** to accept the new settings and retain all other parameters in this menu.

14 With Channel 1014 selected, press **Channel** (*in the Measure key group*). The Channel key lights, the required relays automatically close, and measurements begin.

15 With the Channel key still lighted, turn the knob to display channel **1016**. You should see measurements start for DC VOLTS (your previously configured function for channel 16).

16 With the Channel key still active, turn the knob between channels **1016** and **1014** to monitor the measurement results for each channel. As you pass Channel 1015, which is not configured for a measurement, notice that the associated channel relay is open and measurement is off.

17 Press **Channel** so the light is off. Notice that **Monitoring** is now turned off, but you can continue to view the measurement parameters on channels 1014 and 1016.

During This Tutorial Example:

– You configured channel 16 for dc voltage measurements, then started, viewed results, and stopped continuous dc voltage measurements on channel 16.

– You configured channel 14 for ac voltage measurements, then started, viewed results, and stopped continuous ac voltage measurements on channel 14.

– You scrolled between channels 14 and 16 to alternatively start, monitor, and stop continuous measurements on the channels.

Connecting the 34980A to Your Computer

NOTE

To easily configure and verify an interface connection between the 34980A and your PC, you can use the Keysight IO Libraries Suite or an equivalent.

- The Keysight IO Libraries Suite, For information and installation, refer to www.keysight.com/find/iolib.
- *Previous versions* of the Keysight IO Libraries software are also available. For more information and to download the current or an earlier version from the Web, go to www.keysight.com/find/iolib.
- The procedures in this section refer to the Connectivity Guide (Keysight Technologies USB/LAN/GPIB Interfaces Connectivity Guide). If you have installed the IO Libraries Suite, you can access the Connectivity Guide via the Keysight IO Libraries Control icon. Or, you can access the Connectivity Guide via the Web at www.keysight.com/find/connectivity.

The Keysight 34980A supports GPIB, USB, and LAN interfaces. All three interfaces are enabled at power on. The corresponding front-panel annunciator turns on whenever there is activity on the remote interface.

GPIB Interface You need only set the GPIB address for the instrument and connect it to your PC using a GPIB cable (sold separately).

USB Interface There is nothing to configure on your instrument for a USB connection. Just connect the instrument to your PC using a USB 2.0 cable (sold separately).

LAN Interface By default, DHCP is enabled on the instrument, which may enable network communication over the LAN interface (10BaseT/100BaseTx). You may need to set several LAN configuration parameters. A crossover LAN cable is shipped with your instrument.

This section provides basic instructions for establishing a GPIB, USB or LAN *connection* between the 34980A and a PC. For detailed *configuration* instructions for GPIB or LAN, see "Remote Interface Configuration" on page 121.

Connecting Over LAN

Selecting the LAN network type

You can connect and configure your 34980A for Site LAN or Isolated (non-site) LAN operation.

– A *Site LAN* network is defined as a local area network (LAN) in which computers and LAN-enabled instruments are connected to a site LAN (workgroup LAN, Intranet, or enterprise LAN) via optional routers, hubs, and/or switches.

Typical Site LAN Networks

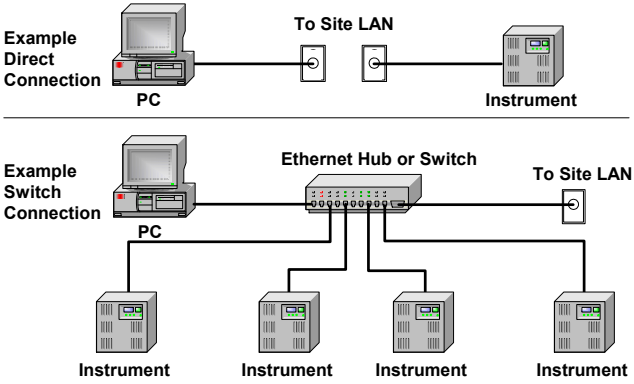

– An *Isolated LAN* network is defined as a local area network (LAN) in which computers and LAN-enabled instruments are not connected to a site LAN. Use the crossover cable provided with the 34980A to make a direct connection between the 34980A and your computer. Crossover cables are also supported by many newer LAN switches or routers.

Typical Isolated (Non-Site) LAN Networks

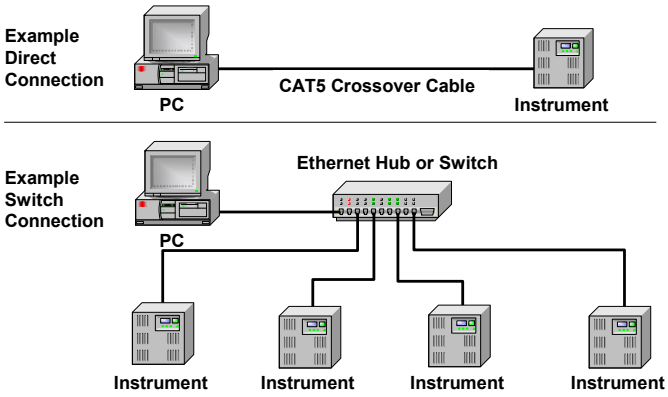

The diagrams above show examples of typical site LAN and isolated LAN networks. Select the LAN network type that you will use to connect the 34980A to your computer. Then follow the corresponding procedures shown on "Connecting Via Site LAN" on page 90 or "Connecting Via Isolated (Non-Site) LAN" on page 93.

Connecting Via Site LAN

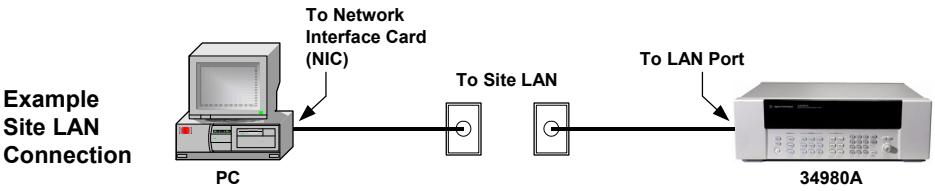

1 Using a standard LAN patch cable (not supplied), connect your computer and the 34980A to LAN wall outlets.

2 Make sure power is applied to your computer and verify that the operating system is fully booted. Then apply power to the 34980A.

3 Using the flow diagram shown below, navigate through the 34980A front-panel **Utility** menu. At the **IO PORT** menu, select **LAN**. At the **LAN SETTINGS** menu, select **MODIFY** and verify that **DHCP** is **ON** (*ON is the factory*

default state). If your LAN does not support DHCP, refer to the Connectivity Guide.

Front Panel Menu Navigation Flow Diagram

to Configure a Site LAN Connection

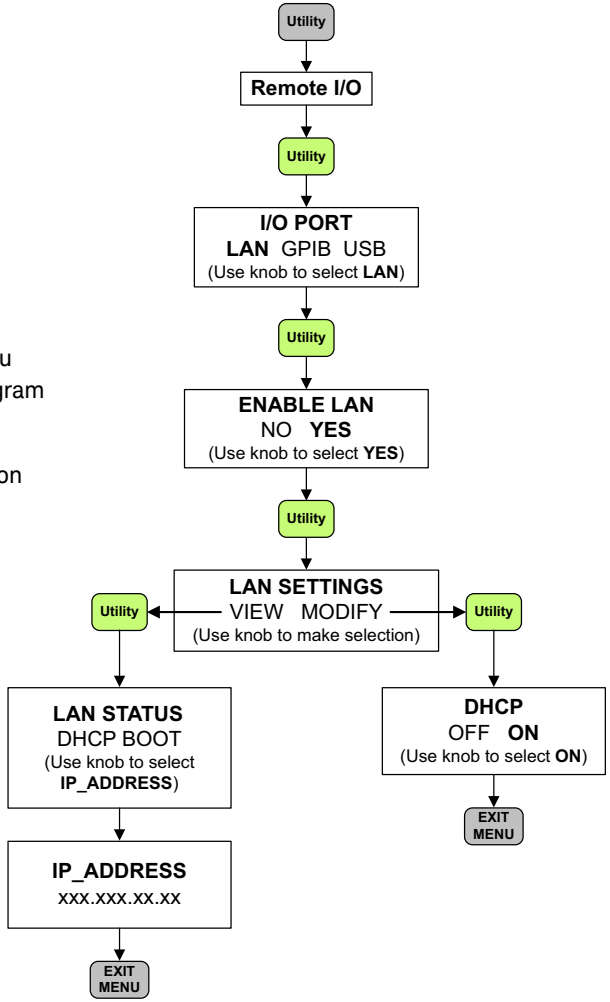

4 Press **EXIT MENU**, which saves any changes and defaults all other parameters in the Utility menu.

5 Wait for the DHCP server to assign a valid address; this operation can take between 30 seconds and one minute to complete).

6 From the **Utility** menu (see Navigation Flow Diagram on page 91), navigate to the **LAN SETTINGS** choice and select **VIEW**. Using the flow diagram as a guide, view the instrument's IP address and other LAN settings. Write down the IP address in the space below:

   34980A IP Address: _____

7 Press **EXIT MENU**.

8 Now you can use the integrated 34980A Web Browser Interface to access and control the instrument. See "Launching the Web Interface" on page 100 for more information.

9 If you plan to program the instrument over LAN using other software:

   – Make sure you have installed the required I/O software on your computer.

   – If you will be using the *Keysight IO Libraries Suite*, use its Connection Expert utility to add the 34980A and verify a connection. When identifying the instrument, it is easiest if you use the IP address noted in step 6 above.

   – For an overview on programming instruments via LAN, refer to the Connectivity Guide.

Connecting Via Isolated (Non-Site) LAN

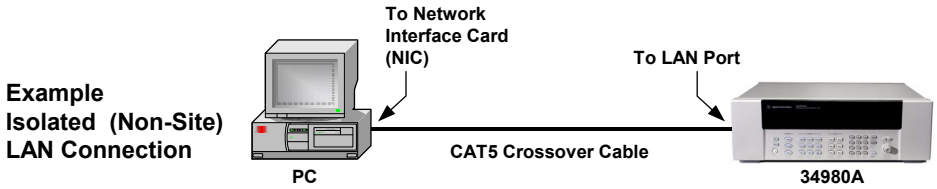

1 Using the CAT5 crossover cable provided with the 34980A, connect your computer to the 34980A.

2 Make sure power is applied to your computer and verify that the operating system is fully booted. Then apply power to the 34980A.

3 Using the flow diagram below, navigate through the 34980A front-panel **Utility** menu. At the **IO PORT** menu, select **LAN**. At the **LAN SETTINGS** menu, select **MODIFY** and set **DHCP** to **OFF** (*note that ON is the factory default state*).

Front Panel Menu Navigation Flow Diagram

to Configure an Isolated LAN Connection

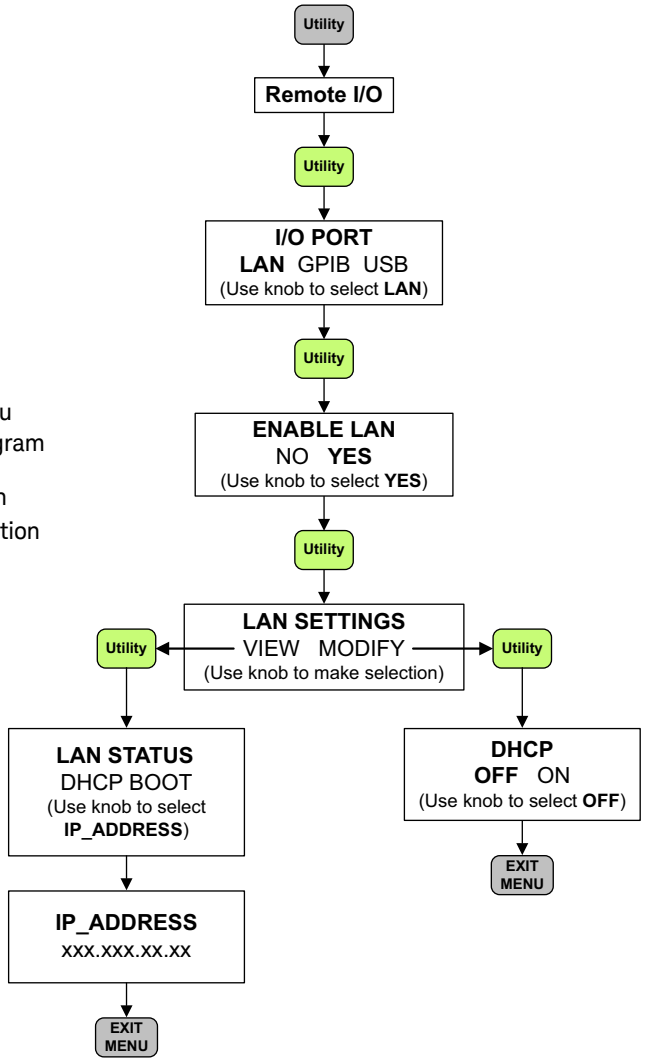

4 Press **EXIT MENU**, which saves any changes and defaults all other parameters in the Utility menu.

5 From the **Utility** menu, navigate to the **LAN SETTINGS** choice and select **VIEW**. Using the flow diagram ON page 93 as a guide, view the instrument's IP address and other LAN settings. Write down the IP address in the space below:

   34980A IP Address: _____

6 Press **EXIT MENU**.

7 Now you can use the integrated 34980A Web Browser Interface to access and control the instrument. See "Launching the Web Interface" on page 100 for more information.

8 If you plan to program the instrument over LAN using other software (e.g. *Keysight IO Libraries Suite*, *BenchLink Data Logger Pro*):

   – Make sure you have installed the required I/O software on your computer.

   – If you will be using the *Keysight IO Libraries Suite*, use its Connection Expert utility to add the 34980A and verify a connection. When identifying the instrument, it is easiest if you use the IP address noted in step 5 above.

   – For an overview on programming instruments via LAN, refer to the Connectivity Guide.

Connecting Over GPIB

1 Make sure you have installed the required I/O software and device drivers on your computer.

2 Follow the instructions from your GPIB interface card's vendor to install and configure the GPIB hardware in your computer.

3 Connect a GPIB cable (not provided) between your computer and the 34980A.

4 Make sure power is applied to your computer and verify that the operating system is fully booted. Then apply power to the 34980A.

5 Using the flow diagram below, navigate through the 34980A front-panel **Utility** menu. At the **IO PORT** menu, select **GPIB**. At the **ENABLE GP-IB** submenu, select **YES**.

Front Panel Menu Navigation Flow Diagram to Configure a GPIB Connection

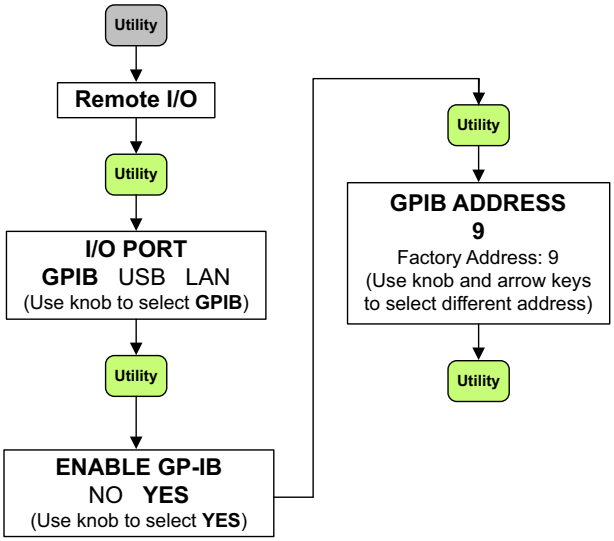

6 Press **Utility** again to display the GPIB Address. The 34980A is shipped from the factory with a default **GPIB ADDRESS** of 9. To change the address, use the know or arrow keys.

7 Press **Utility** again to save any changes and exit the Utility menu.

8 Use the Connection Expert utility of the *Keysight IO Libraries Suite* to add the 34980A and verify a connection. *If* you have installed any other I/O software, refer to documentation included with that software.

9 Now you can use various programming environments to control the 34980A. For an overview on programming instruments via GPIB, refer to the Connectivity Guide.

Connecting Over USB

1 Make sure you have installed the required I/O software and device drivers on your computer.

2 Connect a standard USB cable between your computer and the 34980A.

3 Make sure your computer and its operating system is fully booted. Then apply power to the 34980A.

4 The Found New Hardware Wizard will automatically start and guide you through configuring the 34980A as a USB device. To install the software automatically, accept all defaults.

5 Using the flow diagram below, navigate through the 34980A front-panel **Utility** menu. At the **IO PORT** menu, select **USB**. At the **ENABLE USB** submenu, select **YES**.

Front Panel Menu Navigation Flow Diagram to Configure a USB Connection

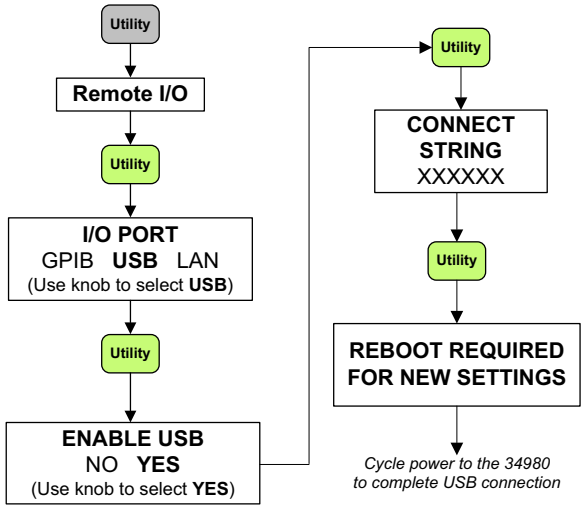

6 Press **Utility**. The 34980A will display a two-line status message, with the 34980A's connect code for USB.

7 Press **Utility** one more time to save any changes and exit the Utility menu. If you made a change, the message **REBOOT REQUIRED FOR NEW SETTINGS** will be displayed.

8 Cycle power to the unit. When it reboots, the USB connection will be enabled.

9 Use the Connection Expert utility of the *Keysight IO Libraries Suite* to add the 34980A and verify a connection. If you have installed any other I/O software, refer to documentation included with that software.

10 Now you can use various programming environments to control the 34980A. For an overview on programming instruments via USB, refer to the Connectivity Guide.

Communicating with the 34980A

You can use either instrument drivers or SCPI (Standard Commands for Programmable Instruments) commands – in any programming environment – to communicate with the 34980A. However, Keysight has designed drivers that work best in recommended environments, as shown in the table below. To install drivers and their associated Help files, refer to www.keysight.com/find/34980a.

Programming Environment	Driver
Microsoft® Visual C® version 6.0, Visual C++®, and ANSI C	IVI-C, IVI-COM
Microsoft® Visual Basic® version 6.0	IVI-C, IVI-COM
Microsoft® Visual Studio®.NET for C#, C, and Visual Basic	IVI-COM
Keysight VEE	IVI-COM
National Instrument's LabVIEW®	LabVIEW® Plug and Play (native mode), IVI-C
National Instrument's LabWindows/CVI®	IVI-C

As discussed in "Measurement Software" on page 25, several graphic tools are available for remote programming and control of the 34980A in addition to basic use of SCPI. These include the BenchLink Data Logger software (Pro and standard versions) and the Web Browser Interface.

For a brief introduction to the BenchLink Data Logger software, see "Data Logging and Monitoring" on page 25. The Data Logger software, and software support are supplied with the 34980A on the 34980A Product Reference link.

The Web Browser Interface is described in the subsequent subsections.

Operating the 34980A using the Integrated Web Browser Interface

You can use the 34980A's Web Browser Interface for remote LAN access and control (configuration, troubleshooting and monitoring) of the instrument via a Java-enabled Web browser, such as Microsoft® Internet Explorer.

This section provides an overview of the 34980A Web Interface. While it works with the 34980A mainframe and all installed plug-in modules, the 34921A multiplexer module is used for illustration purposes.

NOTE **The following tasks assume you have configured the 34980A for LAN communication and have verified connection to a LAN network. See "Connecting Over LAN" on page 89 for more information.**

Launching the Web Interface

1 Open your Internet browser from your computer.

2 From the **Tools>Internet Options** menu, navigate to **Connections** (exact navigation depends on your browser), and then select **LAN Settings**.

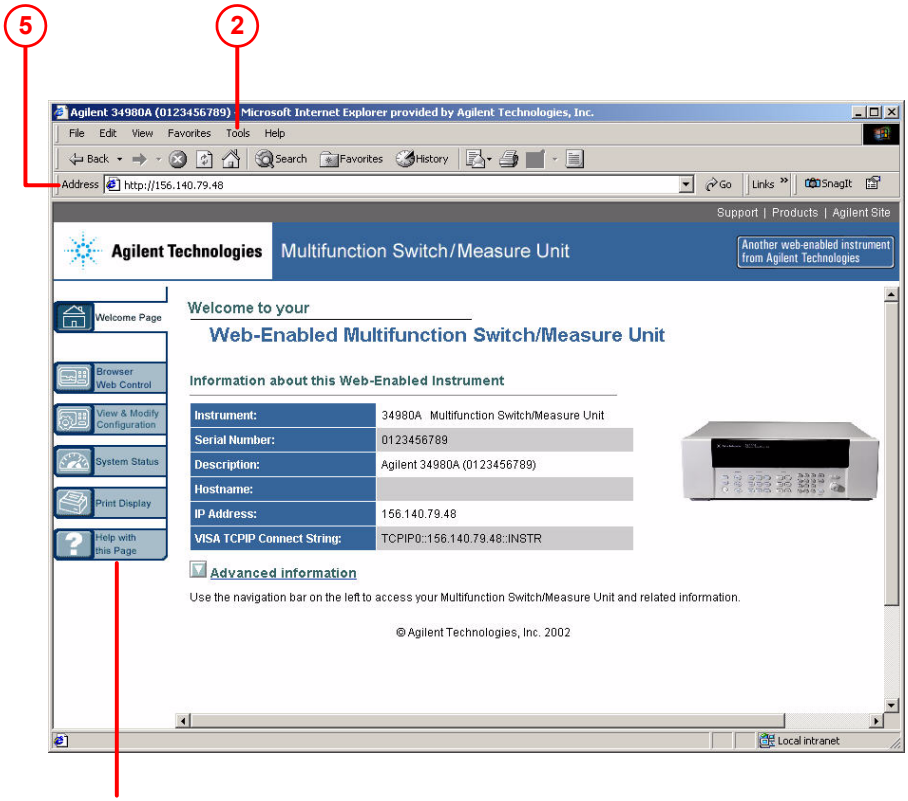

Click here for Help

3 From the LAN Settings dialog, select/activate the bypass proxy server for local addresses (exact terminology depends on your browser).

4 Exit the Internet Options window.

5 Enter the IP address of the 34980A in the **Address** field and press return. Either refer to the IP address you wrote on page 92 or page 95, or use the 34980A's front panel **Utility** menu to read the IP address.

6 After entering the appropriate IP address, the 34980A Web Interface's Welcome Window should appear.

NOTE The procedures in the following subsections will help you understand tasks commonly performed using the 34980A's Web Interface. For additional help on using the interface, click the **?Help with the Page** tab on the lower-left corner of the Web Interface window.

Displaying the Browser Web Control Page

1 From the Welcome Window, click the **Browser Web Control** tab on the left side of the window to display the Browser Web Control page.

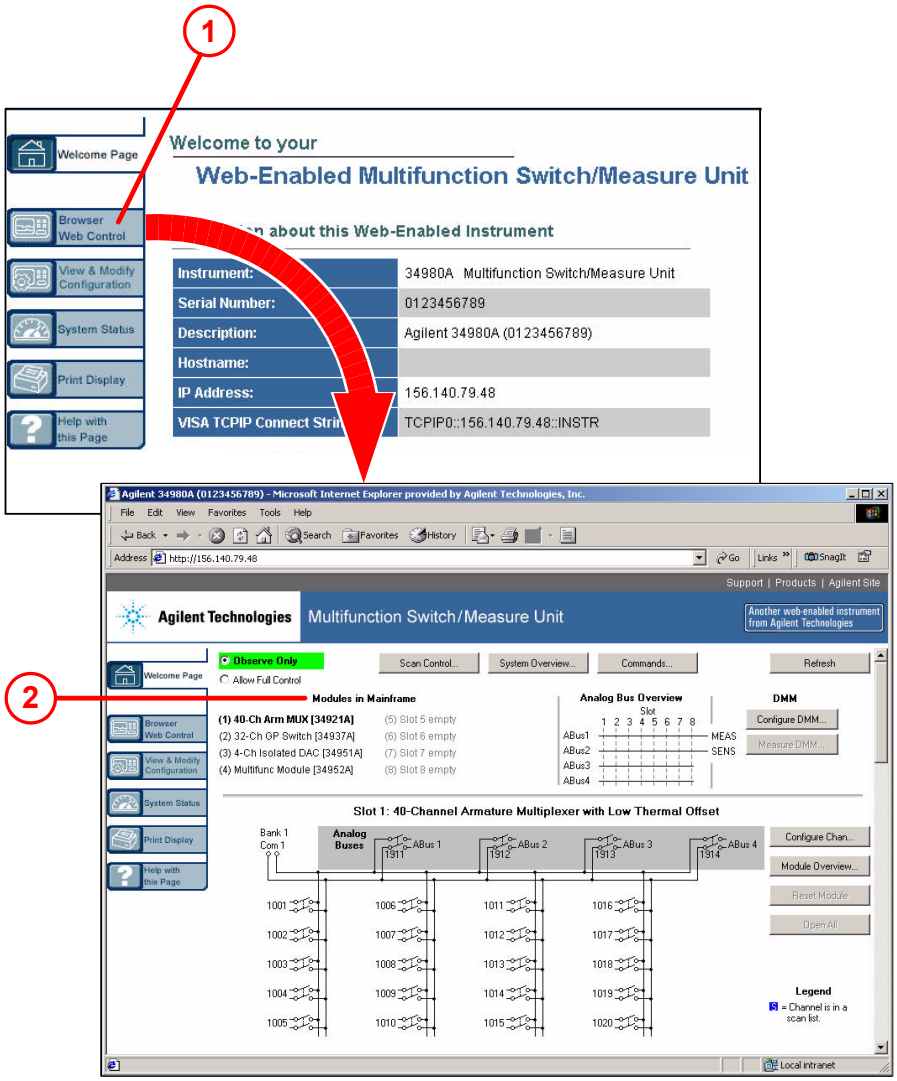

2 From this page, you can view and modify the configuration of the modules currently installed in the 34980A.

When you first launch this page, the configuration of the module in the lowest numbered slot is shown (shown in bold text). To view the configuration of a different module, click on the desired module name from the list (slots are numbered 1 through 8).

Selecting the “Allow Full Control” Mode

Select the **Allow Full Control** radio button as shown. Once enabled, this mode allows you to open and close channel relays and modify the state of the installed modules.

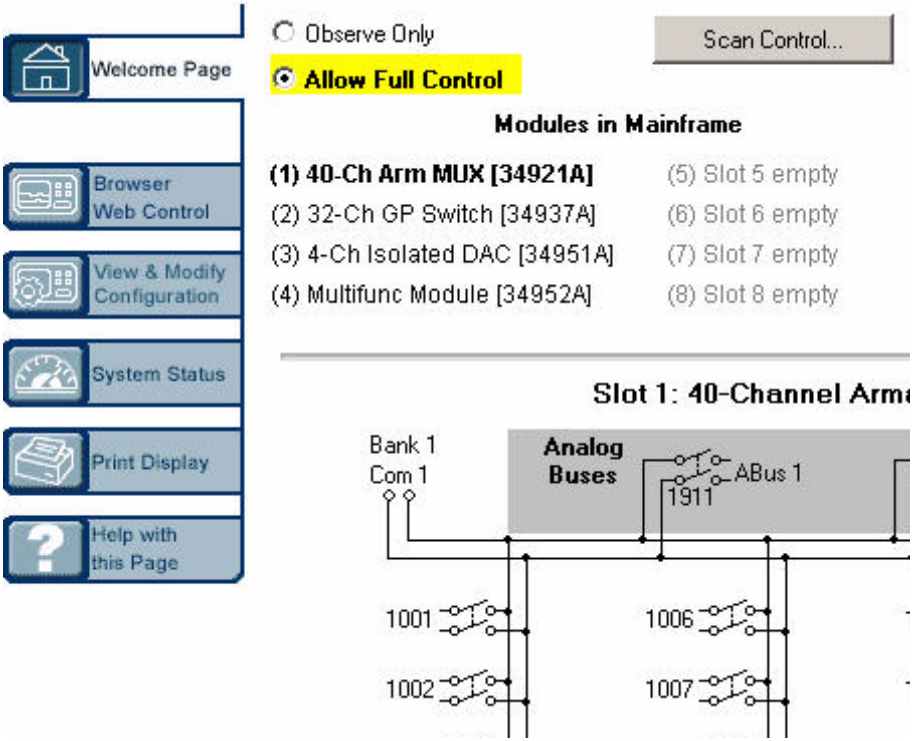

Setting a Web Browser Password

If desired, you can control access to the 34980A Web Interface using password protection. As shipped from the factory, no password is set. To set a password (available from the front panel only), navigate to the WEB PASSWORD menu selection from the 34980A front panel, as follows:

Utility > REMOTE I/O > LAN > LAN SETTINGS > MODIFY > . . . WEB PASSWORD

Use the front panel knob and control keys to enter your password, then press **Exit Menu** to save it.

Once specified, this password must be provided to transition from the *Observe Only* mode to the *Allow Full Control* mode

Closing and Opening Channel Relays

WARNING When working with hazardous voltage levels, intentional closing of multiple bus and channel relays could cause a potential shock hazard on external connections. Use extreme caution when handling, testing and adjusting this instrument. Do not perform these procedures unless qualified to do so. Failure to recognize and observe normal safety precautions could result in personal injury or death.

NOTE You must be in the *Allow Full Control* mode to close and open channels.

1. To close a channel, left-click directly on the graphic of the desired relay. To open a closed channel, click again on the relay graphic.

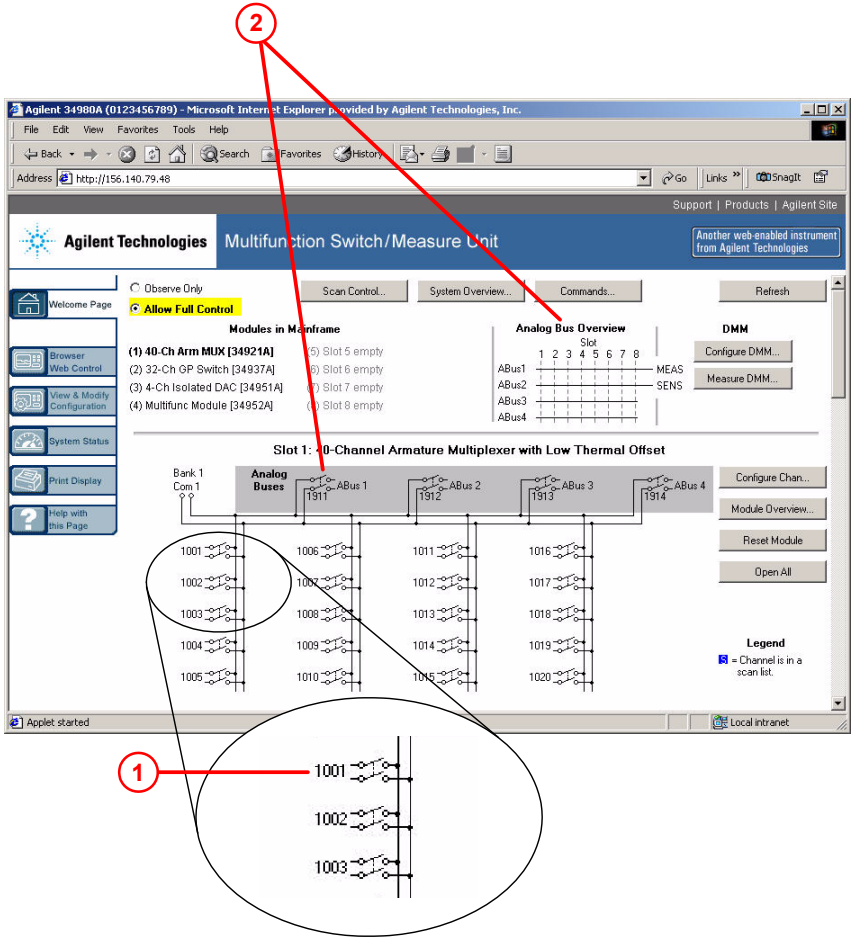

2 You can also open and close the four Analog Bus relays by left-clicking the graphics of these relays. The **Analog Bus Overview** display located near the top of the window shows the slot-by-slot status of the four Analog Buses.

Modifying the Channel Configuration

NOTE You must be in the *Allow Full Control* mode to modify the channel configuration.

1 To modify the measurement configuration of individual channels (e.g., add channel labels, select function and range, etc.), right-click directly on the graphic of the desired relay. The Channel Configuration dialog box for that channel is displayed.

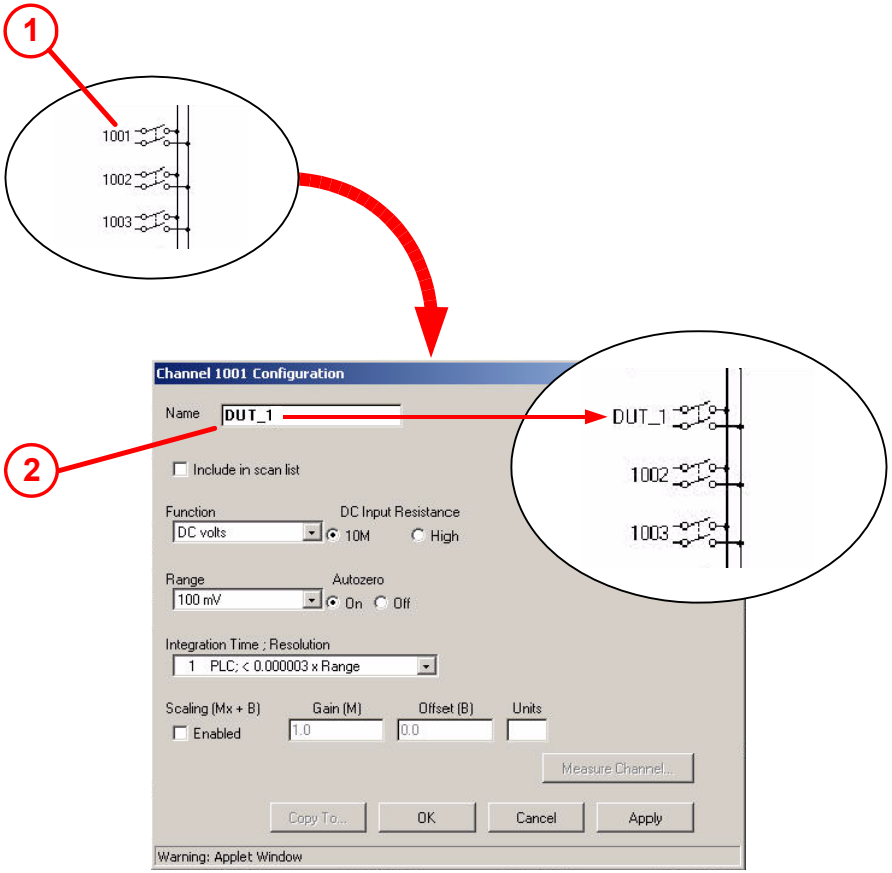

2 As an example, change the label on Channel 1001 to **DUT_1**. Click **OK**.

Sending SCPI Commands Via the Web Interface

NOTE You must be in the *Allow Full Control* mode to send instrument commands to the 34980A.

The Web Interface provides a utility to send SCPI commands to the 34980A via the SCPI Command Interface window. The procedure below shows how to access this window and send commands.

1 Press the **Commands** button at the top of the Web Browser Control page to launch the SCPI Command Interface window.

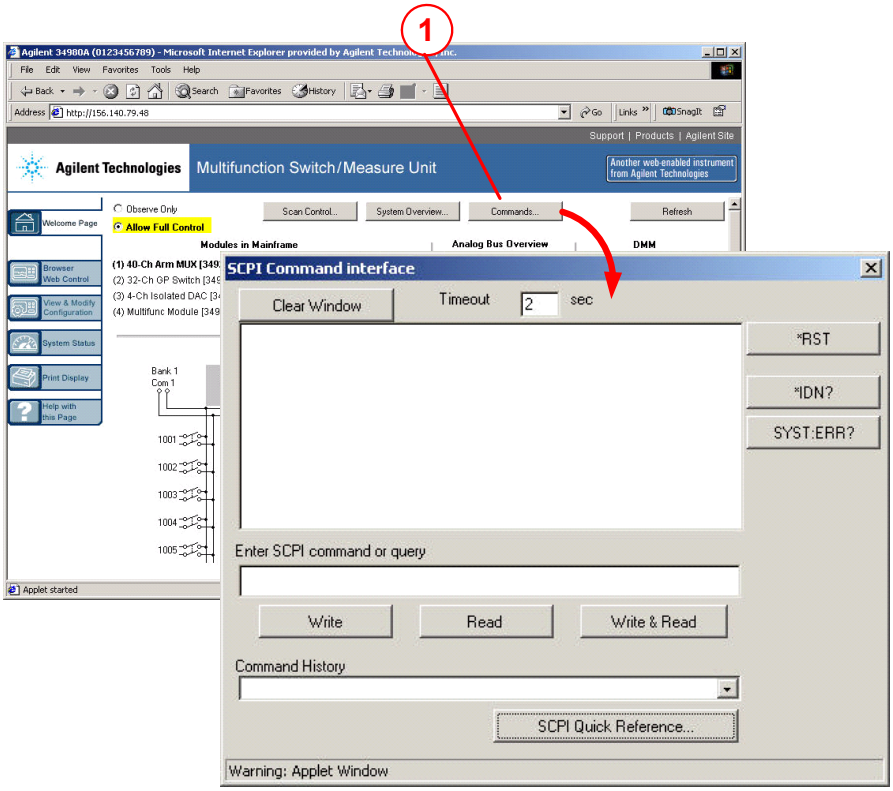

2 The SCPI Command Interface window allows you to:

a Set the time to wait for a command response from the instrument.

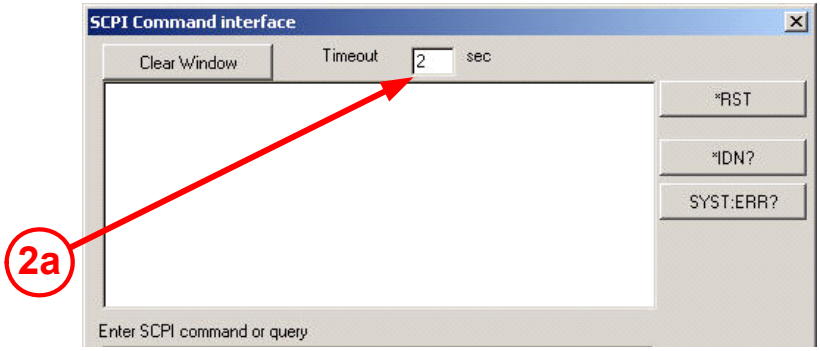

b Select commonly used commands to send to the instrument.

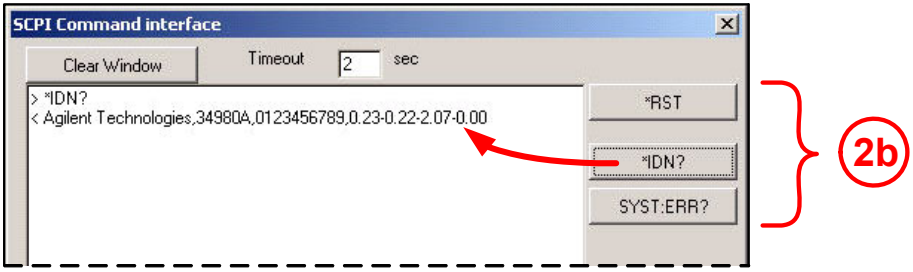

c Enter SCPI commands to send to the instrument. You may:

- Use **Write** to send the command to the instrument.
- Use **Read** to read the response back from the instrument.

– Use **Write & Read** to send a query to the instrument and read back the response.

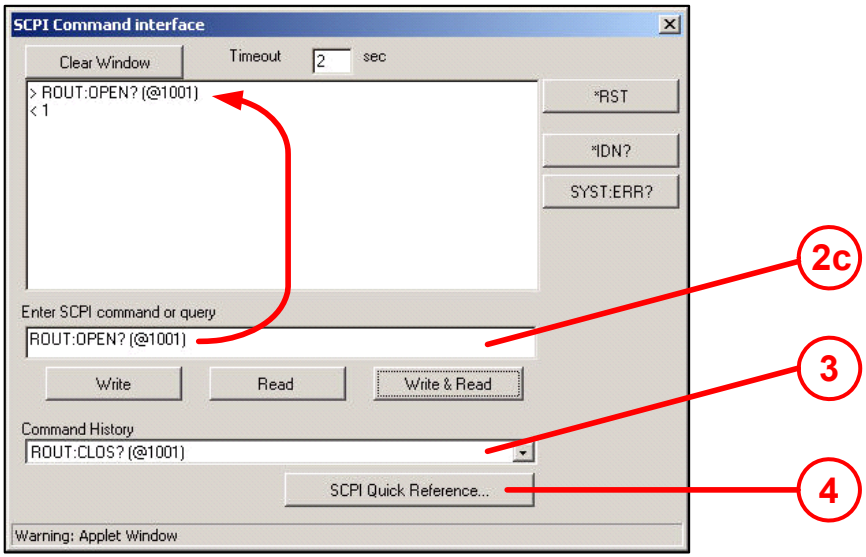

3 In the **Command History** field, you can view the last 20 commands sent to the instrument.

4 You can use the **SCPI Quick Reference** button to access a syntax summary of all SCPI commands for the 34980A. For basic SCPI command syntax and examples, see "SCPI Language Conventions" on page 119.

34980A Documentation Map

If you want to...	...Go here	Additional Comments
Install Keysight IO Libraries Suite	Refer to Additional comments for the website.	You can find installation instructions and additional information at: www.keysight.com/find/iolib.
Install 34980A instrument drivers	Refer to Additional comments for the website.	You can download the drivers from the Keysight Web site at: www.keysight.com/find/drivers.
Read the Keysight Connectivity Guide	Refer to Additional comments for the website.	You can download the guide from the Keysight Web site at: www.keysight.com/find/connectivity.
Learn more about the 34980A Web Browser Interface	Web Interface On-Line Help system	Click on the **?Help with this Page** tab on the Web Interface window.
Learn about the 34980A front-panel menu content and operation	"Front Panel at a Glance" on page 50 "Operating the 34980A from the Front Panel Keyboard" on page 73 Chapter 3, "Features and Functions"	These chapters are part of this *Mainframe User's Guide*. You can also download the manual from the Keysight Web site at: www.keysight.com/find/34980A.
Learn more about the 34980A mainframe and the available plug-in modules	Chapter 3, "Features and Functions" Chapter 4, "Introduction to the Plug-In Modules for the 34980A"	These chapters are part of this *Mainframe User's Guide*. You can also download the manual from the Keysight Web site at: www.keysight.com/find/34980A.
Learn about the SCPI programming commands used with the 34980A	34980A Programmer's Reference On-Line Help Quick Reference Guide	You can download these guides from the Keysight Web site at: www.keysight.com/find/34980A.
Calibrate or troubleshoot the 34980A	34980A Service Guide	You can download the manual from the Keysight Web site at: www.keysight.com/find/34980A.
Update 34980A instrument firmware	Refer to Additional comments for the website.	Download firmware at www.keysight.com/firmware/34980A.

THIS PAGE HAS BEEN INTENTIONALLY LEFT BLANK.

3 Features and Functions

Front Panel Features 115
Basic Operating Modes 118
SCPI Commands 119
Remote Interface Configuration 121
Clearing 34980A Memory 131
Analog Bus and Internal DMM Considerations 133
General Measurement Configuration 136
Temperature Measurement Configuration 153
Voltage Measurement Configuration 158
Resistance Measurement Configuration 160
Current Measurement Configuration 162
Frequency Measurement Configuration 164
Mx+B Scaling 165
Scanning 167
Monitor Mode 189
Scanning With External Instruments 191
Alarm Limits 194
Sequences 204
System-Related Operations 212
Calibration Overview 221
Factory Reset State 224
Instrument Preset State 227

This chapter provides detailed information about the features of the Keysight 34980A, whether you will be operating the instrument from the front panel or over the remote interface.

For general information about the plug-in modules, see Chapter 4, “Introduction to the Plug-In Modules for the 34980A” . For information specific to a particular plug-in module, see the separate User’s Guide provided for that module.

Front Panel Features

Front Panel Display

The 34980A features a dual-line, alphanumeric display, *plus* a set of text and symbolic annunciators to indicate operational modes and error conditions.

At power on, all segments on the front panel are displayed and all lighted keys temporarily turn on. The front panel is ready for operation when the keys are no longer lit and the green channel field on the display shows the first slot in which a module is installed.

Displayed Messages

The two-line display is context-sensitive; the nature of information displayed will depend on if you are navigating the configuration menus, switching between module and channels or viewing measurements

Module and Channel Status

When not in a menu, use the arrow keys to scroll through the (up to eight) modules installed in the 34980A, and the knob to scroll through available channels.

With each press of an arrow key, the upper display line indicates *at left* the channel in use, in the form sccc, where s is the slot number for that module and ccc is the channel number. When you stop on any module, the upper display line will display *at right* the module type briefly, then change to display channel information. Scrolling through the modules will only show information for installed modules, skipping over unused slots. For detailed examples of the slot and channel numbering scheme used in the 34980A, see "Slot and Channel Addressing Scheme" on page 235.

Menu Choices

During menu-driven operations (e.g. measurement configuration), the primary display line indicates the configuration feature or menu, and the second display line indicates the submenu, configuration choices or parameters. The second display line also displays temporary messages, when exiting menus or to convey configuration state changes.

Readings

During measurement operations, the primary display line shows the measurement reading and selected measurement function, and the second display line can be enabled to display secondary measurements.

Annunciators

The annunciators provide indications of communication mode, analog bus connectivity, trigger status, alarm conditions and more. For a complete description, see "Annunciator Display Indicators" on page 56.

Self-Guiding Menus

The 34980A utilizes context-sensitive, self-guiding menus for you to configure measurement functions. In general, the front panel knob and arrow keys are the primary tools in menu navigation. A list of menu navigation hints is provided below:

- To select slots and channels so they appear in the green channel field, use the knob. As you use the front panel, you may be prompted to enter specific parameters. The menu key in use (e.g. **Utility**) will be backlit to indicate that you must select a parameter or that additional parameters are required in that menu.
- To enter alphanumeric characters, use the knob. To enter numbers, use the number keypad or the knob. To move the display cursor position, use the left and right arrow keys.
- To select another choice (other than the one displayed) at a given menu level, turn the knob.
- To select a displayed parameter and move to the next parameter, press either the lighted menu key (e.g. **Utility**) or **ENTER**.
- To save changes, keep other parameters at their same value, and immediately exit the menu, press **EXIT MENU**.
- To exit a menu without saving any changes, press **CANCEL** (located next to the number keypad).
- When you have entered all required parameters, the lighting on the menu key will turn off.

Front Panel Controls

The front panel keys control local operation of the 34980A. They are illustrated and described in detail in "Front Panel at a Glance" on page 50. Familiarize yourself with the operation of these keys by following the Menu Examples in the Getting Started chapter, beginning with "Menu Example 1: Setting the Time and Date" on page 76.

Throughout *this* chapter, for each feature which can be controlled from the front panel, the key or menu navigation sequence is provided. For example, the navigation instruction given to view menu choices for temperature measurement units is:

DMM (Configure) > TEMPERATURE > UNITS

There are **DMM**, **Channel** and **Scan** keys in both the **Measure** and **Configure** key groups. Pay particular attention to which is specified in a given instruction; the key group is inside parentheses ( ). The above example specifies the **DMM** key in the **Configure** group.

Basic Operating Modes

The 34980A has two basic operating modes: Front Panel Operation and Remote Interface Operation.

The ability to configure the instrument, control circuits and make measurements from the front panel is useful when the devices being tested are in close proximity to the 34980A. However, for most test applications, the 34980A will be located remotely from the devices under test, and you will send commands to it using its remote interface connectivity modes (e.g. LAN, GPIB or USB) and your choice of software (e.g. direct SCPI commands, Web Browser Interface).

For all subsequent sections in this chapter (and in the individual User's Guides accompanying the plug-in modules); each feature of the 34980A mainframe is documented in the following order, as applicable:

- A description of the feature, its application and available choices.
- Instructions for Front Panel Operation.
- Programming instructions/examples for Remote Interface Operation.

The instructions under the heading **Front Panel Operation** either describe how to navigate the front panel menus or specify specific menu settings. The instructions under the heading **Remote Interface Operation** specify the required SCPI commands.

SCPI Commands

The instrument complies with the rules and conventions of the present version of SCPI (Standard Commands for Programmable Instruments).

SCPI Language Conventions

Throughout this guide, the following conventions are used for SCPI command syntax for remote interface programming:

- Braces ({ }) enclose the parameter choices for a given command string. The braces are not sent with the command string.
- A vertical bar (|) separates multiple parameter choices for a given command string.
- Triangle brackets (< >) indicate that you must specify a value for the enclosed parameter. The brackets are not sent with the command string.
- Some parameters are enclosed in square brackets ([ ]). This indicates that the parameter is optional and can be omitted. The brackets are not sent with the command string. If you do not specify a value for an optional parameter, the instrument chooses a default value.

Rules for Using a Channel List

Many of the SCPI commands for the 34980A include a *channel list* parameter which allows you to specify one or more channels.
From the remote interface, the channel number has the form (@*sccc*), where *s* is the mainframe slot number (1 through 8) and *ccc* is the channel number. You can specify a single channel, multiple channels, or a range of channels.

The following command closes channel 10 on the module in slot 3.

```
ROUT:CLOS (@3010)
```

The following command closes channels 10, 12, and 15 on the module in slot 2.

```
ROUT:CLOS (@2010,2012,2015)
```

The following command closes channels 5 through 10 (slot 1) and channel 15 (slot 2). When you specify a range of channels, any channels that are invalid will be ignored (no error will be generated) but the first and last channel in the range must be valid.

```
ROUT:CLOS (@1005:1010,2015)
```

The Analog Bus relays (numbered *s*911, *s*912, *s*913, etc.) on the multiplexer and matrix modules are ignored if they are included in a range of channels. An error will be generated if an Analog Bus relay is specified as the first or last channel in a range of channels. For example, the following command closes all valid channels between channel 30 (slot 1) and channel 5 (slot 2). In addition, this command closes Analog Bus relay 911 on the module in slot 1 (Bank 1). Note that although the specified range of channels includes the other Analog Bus relays, they are ignored and are not closed by this command.

```
ROUT:CLOS (@1030:2005,1911)
```

The following command will generate an error since the Analog Bus relays cannot be specified as the first or last channel in a range of channels (none of the channels will be closed).

```
ROUT:CLOS (@1005:1911)  !Generates an error
```

In the following command, since the optional <ch_list> parameter is omitted, the command will be applied to the internal DMM. If the internal DMM is disabled or is not present, an error will be generated.

```
INP:IMP:AUTO ON  !Applies to the internal DMM
```

Remote Interface Configuration

NOTE To easily configure and verify an interface connection between the 34980A and your PC, you can use the Keysight IO Libraries Suite or an equivalent.

- For information and installation on the Keysight IO Libraries Suite, refer to www.keysight.com/find/iolib.
- *Previous versions* of the Keysight IO Libraries software are also available. For more information and to download the current or an earlier version from the Web, go to www.keysight.com/find/iolib.
- If you have installed the IO Libraries Suite, you can access the Connectivity Guide via the Keysight IO Libraries Control icon. Or, you can access the Connectivity Guide via the Web at www.keysight.com/find/connectivity. This guide provides detailed information on connecting and troubleshooting GPIB, USB and LAN interfaces.

The Keysight 34980A supports GPIB, USB, and LAN interfaces. All three interfaces are enabled at power on. All three interfraces are enabled at power on, and the corresponding front-panel annunciator turns on whenever there is activity on the remote interface.

Remote communication with the 34980A requires three steps:

1. **Making a PC data connection**. This was covered in Chapter 1. For basic connection instructions, see "Connecting the 34980A to Your Computer" on page 88.
2. **Configuration of that connection**. The remainder of *this* section covers configuration *settings* for GPIB and LAN (there are no configuration settings needed for a USB connection).
3. **Sending commands** (programming the 34980A). You may use SCPI commands, the Web Browser Interface, the BenchLink Data Logger software, or another tool.

   For SCPI Command syntax (detailed information on the SCPI commands available to program the instrument over the remote interface), see the Help file that is available in this chapter.

   The 34980A Web Browser Interface is covered fully in Chapter 2. *For an overview of the Web Browser Interface* (LAN only), see "Operating the 34980A using the Integrated Web Browser Interface" on page 99.

GPIB Interface

Each device on the GPIB (IEEE-488) interface must have a unique address. You can set the instrument's address to any value between 0 and 30.
The address is set to "**9**" when the instrument is shipped from the factory.

- Your computer's GPIB interface card has its own address. Be sure to avoid using the computer's address for any instrument on the interface bus.
- The GPIB address is stored in non-volatile memory, and does not change when power has been off, after a Factory Reset (`*RST` command), or after an Instrument Preset (`SYSTem:PRESet` command).

Front Panel Operation: Utility > REMOTE I/O > GPIB > GPIB ADDRESS

To set the GPIB address, turn the knob (or use the number keypad) to select the desired address.

Remote Interface Operation: `SYSTem:COMMunicate:GPIB:ADDRess`

LAN Interface

By default, DHCP is enabled on the instrument, which may enable network communication over the LAN interface (10BaseT/100BaseTx) without modifying default settings. However, you may need to change several LAN configuration parameters, including:

- DHCP
- IP Address
- Auto-IP
- Subnet Mask
- Default Gateway
- Host Name
- DNS Server
- Domain Name

Front panel and remote interface instructions for setting these parameters are provided in the following subsections.

DHCP

DHCP (Dynamic Host Configuration Protocol) is a protocol for automatically assigning a dynamic IP address to a device on a network. DHCP is typically the easiest way to configure your instrument for remote communication using the LAN interface.

If you change the DHCP setting, you must cycle power on the 34980A to activate the new setting.

- When DHCP is *enabled* (factory setting), the instrument will try to obtain an IP address from a DHCP server. If a DHCP server is found, it will assign a dynamic IP address, Subnet Mask, and Default Gateway to the instrument.
- When DHCP is *disabled* or unavailable, the instrument will use the static IP address, Subnet Mask, and Default Gateway during power-on.
- If a DHCP LAN address is not assigned by a DHCP server, then a static IP will be assumed after approximately 2 minutes.
- The DHCP setting is stored in non-volatile memory, and does not change when power has been off, after a Factory Reset (`*RST` command), or after an Instrument Preset (`SYSTem:PRESet` command).

Front Panel Operation:

Utility > REMOTE I/O > LAN > LAN SETTINGS > MODIFY > DHCP

Remote Interface Operation:

```
SYSTem:COMMunicate:LAN:DHCP {OFF|ON}
```

IP Address

An Internet Protocol (IP) Address is required for all IP and TCP/IP communications with the instrument. If DHCP is enabled (factory setting), the specified static IP address is not used. However, if the DHCP server fails to assign a valid IP address, the currently configured static IP address will be used.

If you change the IP address, you must cycle power on the 34980A to activate the new setting.

- The default IP Address for the 34980A is “169.254.9.80”.
- Dot-notation addresses (“nnn.nnn.nnn.nnn” where “nnn” is a byte value) must be expressed with care, as most web software on the computer will interpret byte values with leading zeros as octal numbers. For example, “255.255.020.011” is actually equivalent to decimal “255.255.16.9” not “255.255.20.11” because “.020” is interpreted as “16” expressed in octal, and “.011” as “9”. To avoid confusion, use only decimal expressions of byte values (0 to 255), with no leading zeros.

  For example, the 34980A assumes that all dot-notation addresses are expressed as decimal byte values and strips all leading zeros from these byte values. Thus, attempting to set an IP address of “255.255.020.011” will become “255.255.20.11” (a purely decimal expression). Be sure to enter the exact expression, “255.255.20.11”, in your computer web software to address the instrument. Do not use “255.255.020.011” – the computer will interpret this address differently due to the leading zeros.
- If you are planning to use a static IP address on a Corporate LAN, contact your network administrator to obtain a fixed IP address to be used exclusively for your instrument.
- The IP address is stored in non-volatile memory, and does not change when power has been off, after a Factory Reset (`*RST` command), or after an Instrument Preset (`SYSTem:PRESet` command).

Front Panel Operation:

Utility > REMOTE I/O > LAN > LAN SETTINGS > MODIFY > DHCP OFF > AUTO IP OFF > IP ADDRESS

Remote Interface Operation:

```
SYSTem:COMMunicate:LAN:IPADdress "<address>"
```

Auto-IP

The Auto-IP standard automatically assigns an IP address to the 34980A when on a network that does not have DHCP servers.

If you change the Auto-IP configuration, you must cycle power on the 34980A to activate the new setting.

- Auto-IP allocates IP addresses from the link-local address range (169.254.xxx.xxx).
- From the factory, the Auto-IP setting is enabled.
- The Auto-IP setting is stored in non-volatile memory, and does not change when power has been off, after a Factory Reset (`*RST` command), or after an Instrument Preset (`SYSTem:PRESet` command).

Front Panel Operation:

Utility > REMOTE I/O > LAN > LAN SETTINGS > MODIFY > DHCP OFF > AUTO IP

Remote Interface Operation:

```
SYSTem:COMMunicate:LAN:AUTOip (OFF|ON}
```

Subnet Mask

The instrument uses the Subnet Mask to determine if a client IP address is on the same local subnet. When a client IP address is on a different subnet, all packets must be sent to the Default Gateway. Contact your network administrator to determine if subnetting is being used and for the correct Subnet Mask.

If you change the Subnet Mask, you must cycle power on the 34980A to activate the setting.

- The default Subnet Mask for the 34980A is “255.255.0.0”.
- If DHCP is enabled, the specified Subnet Mask is not used. However, if the DHCP server fails to assign a valid IP address, the currently configured Subnet Mask will be used.
- Dot-notation addresses (“nnn.nnn.nnn.nnn” where “nnn” is a byte value) must be expressed with care, as most web software on the computer will interpret byte values with leading zeros as octal numbers. For example, “255.255.020.011” is actually equivalent to decimal “255.255.16.9” not “255.255.20.11” because “.020” is interpreted as “16” expressed in octal, and “.011” as “9”. To avoid confusion, use only decimal expressions of byte values (0 to 255), with no leading zeros.

  For example, the 34980A assumes that all dot-notation addresses are expressed as decimal byte values and strips all leading zeros from these byte values. Thus, attempting to set a Subnet Mask of “255.255.020.011” will become “255.255.20.11” (a purely decimal expression). Be sure to enter the exact expression, “255.255.20.11”, in your computer web software to address the instrument. Do not use “255.255.020.011” — the the computer will interpret this address differently due to the leading zeros.
- A value of “0.0.0.0” or “255.255.255.255” indicates that subnetting is not being used.
- The Subnet Mask is stored in non-volatile memory, and does not change when power has been off, after a Factory Reset (`*RST` command), or after an Instrument Preset (`SYSTem:PRESet` command).

Front Panel Operation:

Utility > REMOTE I/O > LAN > LAN SETTINGS > MODIFY > DHCP OFF > AUTO IP OFF > . . . SUBNET MASK

Remote Interface Operation:

```
SYSTem:COMMunicate:LAN:SMASk "<mask>"
```

Default Gateway

A Default Gateway address allows the instrument to communicate with systems that are not on the local subnet. Thus, this is the Default Gateway where packets are sent which are destined for a device not on the local subnet, as determined by the Subnet Mask setting. Contact your network administrator to determine if a gateway is being used and for the correct address.

If you change the Default Gateway, you must cycle power on the 34980A to activate the new setting.

- The default for the 34980A is “0.0.0.0” (no gateway, and subnetting is not being used).
- If DHCP is enabled, the specified Default Gateway is not used. However, if the DHCP server fails to assign a valid IP address, the currently configured Default Gateway will be used.
- Dot-notation addresses (“nnn.nnn.nnn.nnn” where “nnn” is a byte value) must be expressed with care, as most web software on the computer will interpret byte values with leading zeros as octal numbers. For example, “255.255.020.011” is actually equivalent to decimal “255.255.16.9” not “255.255.20.11” because “.020” is interpreted as “16” expressed in octal, and “.011” as “9”. To avoid confusion, use only decimal expressions of byte values (0 to 255), with no leading zeros.

  For example, the 34980A assumes that all dot-notation addresses are expressed as decimal byte values and strips all leading zeros from these byte values. Thus, attempting to set a Default Gateway of “255.255.020.011” will become “255.255.20.11” (a purely decimal expression). Be sure to enter the exact expression, “255.255.20.11”, in your computer web software to address the instrument. Do not use “255.255.020.011” – the computer will interpret this address differently due to the leading zeros.
- The Default Gateway is stored in non-volatile memory, and does not change when power has been off, after a Factory Reset (`*RST` command), or after an Instrument Preset (`SYSTem:PRESet` command).

Front Panel Operation:

Utility > REMOTE I/O > LAN > LAN SETTINGS > MODIFY > DHCP OFF > AUTO IP OFF > . . . DEFAULT GATEWAY

Remote Interface Operation:

```
SYSTem:COMMunicate:LAN:GATEway "<address>"
```

Host Name

The Host Name is the host portion of the domain name, which is translated into an IP address.

If you change the Host Name, you must cycle power on the 34980A to activate the new setting.

- The default Host Name for the 34980A is “A-34980A-*nnnnn*”, where *nnnnn* represents the last five digits of the instrument’s serial number.
- If Dynamic Domain Name System (DNS) is available on your network and your instrument uses DHCP, the Host Name is registered with the Dynamic DNS service at power-on.
- If DHCP is enabled, the DHCP server can change the specified Host Name.
- The Host Name is stored in non-volatile memory, and does not change when power has been off, after a Factory Reset (`*RST` command), or after an Instrument Preset (`SYSTem:PRESet` command).

Front Panel Operation:

Utility > REMOTE I/O > LAN > LAN SETTINGS > MODIFY > . . . HOST NAME

Remote Interface Operation:

```
SYSTem:COMMunicate:LAN:HOSTname "<name>"
```

DNS Server

The Domain Name Service (DNS) is an Internet service that translates Domain names into IP addresses. Contact your network administrator to determine if DNS is being used and for the correct address.

If you change the DNS address, you must cycle power on the 34980A to activate the new setting.

- The default DNS Address for the 34980A is “0.0.0.0”.
- Dot-notation addresses (“nnn.nnn.nnn.nnn” where “nnn” is a byte value) must be expressed with care, as most web software on the computer will interpret byte values with leading zeros as octal numbers. For example, “255.255.020.011” is actually equivalent to decimal “255.255.16.9” not “255.255.20.11” because “.020” is interpreted as “16” expressed in octal, and “.011” as “9”. To avoid confusion, use only decimal expressions of byte values (0 to 255), with no leading zeros.

  For example, the 34980A assumes that all dot-notation addresses are expressed as decimal byte values and strips all leading zeros from these byte values. Thus, attempting to set an IP address of “255.255.020.011” will become “255.255.20.11” (a purely decimal expression). Be sure to enter the exact expression, “255.255.20.11”, in your computer web software to address the instrument. Do not use “255.255.020.011” – the computer will interpret this address differently due to the leading zeros.
- The DNS address is stored in non-volatile memory, and does not change when power has been off, after a Factory Reset (`*RST` command), or after an Instrument Preset (`SYSTem:PRESet` command).

Front Panel Operation:

Utility > REMOTE I/O > LAN > LAN SETTINGS > MODIFY > DHCP OFF > AUTO IP OFF > . . . DNS SERVER

Remote Interface Operation:

```
SYSTem:COMMunicate:LAN:DNS "<address>"
```

Domain Name

A domain name is a registered name on the Internet, which is translated into an IP address. *This feature is available from the remote interface only.*

If you change the Domain Name, you must cycle power on the 34980A to activate the new setting.

- If Dynamic Domain Name System (DNS) is available on your network and your instrument uses DHCP, the Domain Name is registered with the Dynamic DNS service at power-on.
- If DHCP is enabled, the DHCP server can change the specified Domain Name.
- The Domain Name is stored in non-volatile memory, and does not change when power has been off, after a Factory Reset (`*RST` command), or after an Instrument Preset (`SYSTem:PRESet` command).

Remote Interface Operation:

```
SYSTem:COMMunicate:LAN:DOMain "<name>"
```

Clearing 34980A Memory

For security reasons, you may want to clear memory in the 34980A.

Volatile Memory

The following settings are stored in *volatile* memory:

- All measurement results
- Any non-default internal DMM settings
- Any non-default channel configurations
- Any non-default Mx+B scaling constants
- All alarm settings

Front Panel Operation:

To clear all measurement results and settings held in volatile memory, cycle power to the 34980A.

Remote Interface Operation:

To clear all measurement results and settings held in volatile memory, send the `*RST` command.

Non-Volatile Memory

The following settings are stored in *non-volatile* memory:

- Optional channel labels
- Real-time system clock setting
- Front-panel number format setting
- GPIB address setting
- LAN settings
- Stored instrument states

Remote Interface Operation:

To clear the stored instrument states, use the `MEMory:STATe:DELete:ALL` command.

To clear non-volatile memory, with the exception of the LAN MAC address and USB ID, use the `SYSTem:SECurity:IMMediate` command.

Analog Bus and Internal DMM Considerations

This section provides important environmental and electrical considerations that can affect mainframe operation.

Environmental Operating Conditions

The 34980A mainframe, including the optional internal DMM, is designed to operate in a temperature range of 0 °C to +55 °C with non-condensing humidity. The maximum relative humidity (non-condensing) is 80% R.H. up to 40°C and decreases linearly to 37% R.H. at 55°C*. Do not use in locations where conductive dust or electrolytic salt dust may be present.

The 34980A should be operated in an indoor environment where temperature and humidity are controlled. Condensation can pose a potential shock hazard. Condensation can occur when the instrument is moved from a cold to a warm environment, or if the temperature and/or humidity of the environment changes quickly.

When used in pollution degree 1 conditions, the maximum voltage rating for the Analog Buses is 300V. When used in pollution degree 2 conditions, the maximum voltage rating is 100V. If conditions change, ensure that condensation has evaporated and the instrument has thermally stabilized until pollution degree 1 conditions are restored before turning on power to the equipment. Refer to Data sheet for complete ratings

*From 40°C to 55°C, the maximum % Relative Humidity follows the line of constant dew point.

NOTE *Pollution Degree 1:* No pollution or only dry, non-conductive pollution occurs. The pollution has no influence (on insulation) (IEC 61010-1).

NOTE *Pollution Degree 2:* Normally only non-conductive pollution occurs. Occasionally, a temporary conductivity (leakage current between isolated conductors) caused by condensation can be expected (IEC 61010-1).

Electrical Operating Conditions

WARNING Under certain conditions, hazardous voltage levels capable of causing injury or death may remain even after external circuits have been disconnected. To avoid electrical shock, remove the main power cord from the 34980A and ensure all connections to the DUT, including field wiring to the instrument and the analog bus (if present) are deenergized and all circuits are discharged before coming in contact with the system. Ensure no hazardous voltages remain on any accessible before handling any part of the instrument and test setup, making connections to the system, removing covers or cleaning the instrument.

WARNING

TRANSIENTS

The Analog Buses and the optional internal DMM are designed to safely withstand occasional transient overvoltages up to 1000 Vpeak. Typically, these transient overvoltages result from switching inductive loads or from nearby lightning strikes. The lightning-caused transient overvoltages that may occasionally occur on mains power outlets may be as high as 2500 Vpeak.

Modules 34923A, 34924A, 34933A are rated for a maximum transient of 750 Vpeak. Module 34934A is rated for a maximum transient of 450 Vpeak. All other modules are rated for 1000 Vpeak. Typically, these transient overvoltages result from switching inductive loads or from nearby lighting strikes. The lightning-caused transient overvoltages that may occasionally occur on a mains power outlets may be as high as 2500 Vpeak.

Do not connect the Analog Buses directly to a mains power outlet. If it is necessary to measure a mains voltage or any circuit where a large inductive load may be switched, you must add signal conditioning elements to reduce the potential transients before they reach the Analog Buses. Transient ratings are listed above.

WARNING

HIGH ENERGY SOURCES

The Analog Buses are designed to handle inputs up to their rated currents or their rated powers, whichever is less. Under certain fault conditions, high energy sources could provide substantially more current or power than the instrument can handle. It is important to provide external current limiting, such as fuses if the inputs are connected to high-energy sources. The overcurrent protection is to be rated for the maximum available short circuit current of the hazardous sources. Ensure that the current limiting devices / snubber circuits are appropriate for the signal being tested. Failure to do so may result in hazardous conditions such as fire or shock and could lead to personal injury or death. Refer to Chapter 5 for the current limiting graphs of 34890A.

General Measurement Configuration

This section contains general information to help you configure the instrument for making measurements. Since these parameters are used by several measurement functions, the discussion is combined into one common section. Refer to the later sections in this chapter for more information on parameters specific to each measurement function.

Overview of Measurement Modes

Two modes of operation are available with the 34980A, depending on the level of switching and measurement that you wish to directly control: the *Stand-Alone DMM Mode* and the *Scanning Mode*.

Stand-Alone DMM Mode

In the Stand-Alone DMM Mode, the internal DMM makes measurements of whatever signals are present on the Analog Buses. In this mode, you have full control of what channel relays are closed and connected to the appropriate Analog Bus for the measurement. You can route your signals directly to the internal DMM using the 34980A multiplexer and matrix modules, or you can connect to external signals via the *Analog Bus* connector located on instrument's rear panel (see "Analog Buses" on page 139).

Front Panel Operation:

- To configure the most common measurement parameters for the internal DMM, use the **DMM (Configure)** key.
- To close the desired channel relays and Analog Bus relays, use the **Close** key. The Analog Bus relays on the multiplexer and matrix modules are numbered *s*911, *s*912, *s*913, etc.
- To auto-trigger the internal DMM and display continuous readings, press the **DMM (Measure)** key. Press the **DMM (Measure)** key again to stop taking measurements.
- For additional triggering control and to store DMM readings in memory, use the **Scan (Configure)** key to set the triggering parameters, and then press and hold the **Scan (Measure)** key to initiate the DMM measurement. These selections are available only for stand-alone DMM use when a scan list has not been defined (see "Stand-Alone DMM Mode" on page 136).

– To stop storing readings in memory during long measurements, press and hold the **Scan (Measure)** key.

Remote Interface Operation:

– You can use the `MEASure?` command without specifying a <ch_list> to quickly take a stand-alone DMM reading. Note, however, that with the `MEASure?` command, most measurement parameters are set to their default values.

– To close the desired channel relays and Analog Bus relays, use the `ROUTe:CLOSe` command. The Analog Bus relays on the multiplexer and matrix modules are numbered *s*911, *s*912, *s*913, etc.

– To directly control all measurement parameters or triggering, use the `CONFigure`, `SENSe`, and `TRIGger` commands without specifying a <ch_list> parameter. To initiate the measurement, use the `INITiate` or `READ?` command without specifying a <ch_list>. Each time you initiate a new measurement, the instrument will clear the previous set of readings from memory.

– To stop a measurement in progress, use the `ABORt` command.

– To view the readings in memory, use the `FETCh?` command (the readings are not erased when you read them).

Scanning Mode

In the Scanning Mode, the 34980A automatically controls a sequence of measurements using the internal DMM, possibly across multiple channels, and stores the results in memory. The 34980A closes and opens the appropriate channel relays and Analog Bus relays required for the sequence. The following general rules apply to the Scanning Mode (for more information on using the Scanning Mode, see "Scanning" on page 167.)

WARNING **When working with hazardous voltage levels, intentional closing of multiple bus and channel relays could cause a potential shock hazard on external connections. Use extreme caution when handling, testing and adjusting this instrument. Do not perform these procedures unless qualified to do so. Failure to recognize and observe normal safety precautions could result in personal injury or death.**

- Any channel that can be “read” by the instrument can also be included in a scan. A scan can also include a read of a digital channel or a read of the totalizer count on the digital modules.
- Before you can initiate a scan, you must set up a scan list to include all desired multiplexer or digital channels. Channels which are not in the scan list are skipped during the scan.
- The Analog Bus relays are automatically opened and closed as required during the scan to connect to the internal DMM for the measurement. For example, all 2-wire measurements use the ABus1 (MEAS) relays for 4-wire measurements, the ABus2 (SENS) relays are used in addition to the ABus1 relays.
- Each time you initiate a new scan, the instrument will clear the previous set of readings from memory.

Front Panel Operation:

- To configure the measurement parameters and add a channel to the scan list, use the **Channel (Configure)** key.
- To initiate a scan and store all readings in memory, press the **Scan (Measure)** key. If you press the **Scan (Measure)** key with no scan list defined, the instrument initiates a DMM-only measurement (see “Stand-Alone DMM Mode” on page 136).
- To stop a scan in progress, press and hold the **Scan (Measure)** key.

Remote Interface Operation:

- To define the list of channels to be included in the scan list, use the `ROUTe:SCAN` command.
- To configure the measurement parameters on the desired channels, use the `CONFigure` and `SENSe` commands.
- To initiate a scan and store all readings in memory, use the `INITiate` or `READ?` command. Each time you initiate a new scan, the instrument will clear the previous set of readings from memory.
- To stop a scan in progress, use the `ABORt` command.
- To view the readings in memory, use the `FETCh?` command (the readings are not erased when you read them).

NOTE You can use the READ? command in one of three forms depending on which measurement mode you wish to use.

- If you omit the optional <ch_list> parameter and a scan list is not currently defined, the READ? command applies to the internal DMM.
- If you omit the optional <ch_list> parameter and a scan list is currently defined, the READ? command performs a scan of the channels in the scan list.
- If you specify a <ch_list>, regardless of whether a scan list is currently defined, the READ? command performs a “temporary” scan of the specified channels (independent of the present scan list).

NOTE You can use the MEASure? command in one of two forms depending on which measurement mode you wish to use.

- If you omit the optional <ch_list> parameter, the MEASure? command applies to the internal DMM.
- If you specify a <ch_list>, the MEASure? command performs a “temporary” scan of the specified channels (independent of the present scan list).

Analog Buses

The 34980A provides four 2-wire internal Analog Buses for easier signal routing. You can route your measurements directly to the internal DMM using the 34980A multiplexer and matrix modules, or you can connect to external signals via the *Analog Bus* connector located on the instrument’s rear panel (see connector pinout below). Since four 2-wire buses are provided, you can dedicate one bus

for use with the internal DMM and use the other three buses for module extensions or additional signal routing between modules.

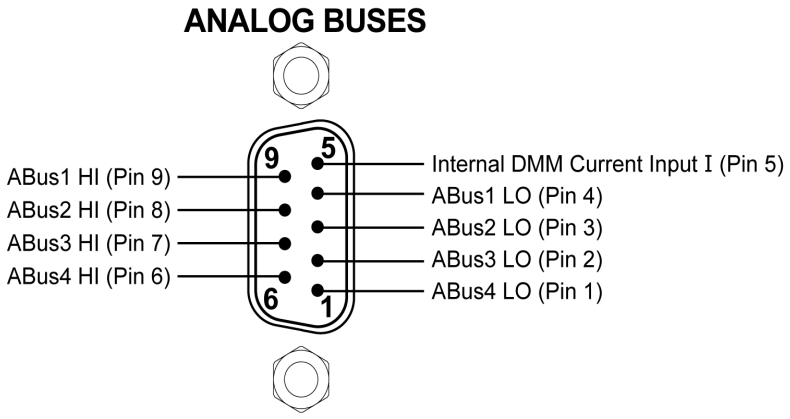

Analog Bus connector (as viewed from rear of instrument)

Measurement Functions

The following table shows which DMM measurement functions are supported by each of the multiplexer modules.

Note that similar considerations must be taken into account on the 34931A, 34932A, and 34933A matrix modules. Since the matrix modules cannot be incorporated into a scan list, you must use the Stand-Alone DMM Mode for these modules.

Measurement Function(s)	**34921A** 40-ch Arm Mux	**34922A** 70-ch Arm Mux	**34923A** 40-ch Reed Mux (2-Wire)	**34923A** 80-ch Reed Mux (1-Wire)	**34924A** 70-ch Reed Mux)	**34925A** 40-ch FET Mux (2-Wire)	**34925A** 80-ch FET Mux (1-Wire)
Voltage, AC/DC	Yes	Yes	Yes	Yes	Yes	Yes	Yes
Current, AC/DC	Yes[a]	No	No	No	No	No	No
Frequency/Period	Yes	Yes	Yes	Yes	Yes	Yes	Yes
Ohms 2-Wire	Yes	Yes	Yes[e]	Yes[e]	Yes[e]	Yes[f]	Yes[f]
Ohms 4-Wire	Yes	Yes	Yes[5]	No	Yes[e]	Yes[f]	No
Thermocouple	Yes[b]	Yes[c]	Yes[c],[d]	Yes[c],[d]	Yes[c],[d]	Yes[c]	Yes[c]
RTD 2-Wire	Yes	Yes	Yes[e]	Yes[e]	Yes[e]	No	No
RTD 4-Wire	Yes	Yes	Yes[e]	No	Yes[e]	Yes[f]	No
Thermistor	Yes	Yes	Yes[e]	Yes[e]	Yes[e]	No	No

[a] Direct current measurements are allowed on channels 41 through 44 only (for all other channels, external shunts are required).

[b] Optional 34921T Terminal Block is required for thermocouple measurements with built-in internal reference junction.

[c] A fixed or external reference junction temperature is required for thermocouple measurement with this module.

[d] Impact of higher offset voltage specification (< 50 μV) must be taken into consideration.

[e] 1 kΩ or higher range used unless 100Ω series resistors are bypassed on module.

[f] 10 kΩ or higher range used for loads over approximately 300Ω due to series resistance of FET channels.

Front Panel Operation: DMM or Channel (Configure) > DMM MEASUREMENT

Use the knob (or numeric keypad) to select the desired channel. Then select the desired measurement function for this channel. You are automatically guided to the next level of the menu where you can configure other measurement parameters (range, integration time, etc.).

Remote Interface Operation: You can select the measurement function using the `CONFigure` and `MEASure?` commands. For example, the following command configures the specified channel for dc voltage measurements.

```
CONF:VOLT:DC 10,DEF,(@3001)
```

Measurement Range

You can allow the instrument to automatically select the measurement range using *autoranging* or you can select a fixed range using *manual ranging*. Autoranging is convenient because the instrument decides which range to use for each measurement based on the input signal. For fastest scanning operation, use manual ranging on each measurement (some additional time is required for autoranging since the instrument has to make a range selection).

- Autorange thresholds:

  Down range at: <10% of range
  Up range at: >120% of range

- If the input signal is greater than can be measured on the selected range (manual ranging), the instrument gives an overload indication: “±OVLD” from the front panel or “±9.9E+37” from the remote interface. An overload on ac voltage measurements will yield one invalid reading following the overload.
- For temperature measurements, the instrument internally selects the range; you cannot select which range is used. For thermocouple measurements, the instrument internally selects the 100 mV range. For thermistor and RTD measurements, the instrument autoranges to the correct range for the transducer resistance measurement.
- For frequency and period measurements, the instrument uses one “range” for all inputs between 3 Hz and 300 kHz. The *range* parameter is required only to specify the resolution. Therefore, it is not necessary to send a new command for each new frequency to be measured.

- The `CONFigure` and `MEASure?` commands contain an optional parameter which allows you to specify the range or autoranging.
- The instrument returns to autoranging when the measurement function is changed and after a Factory Reset (`*RST` command). An Instrument Preset (`SYSTem:PRESet` command) or Card Reset (`SYSTem:CPON` command) does *not* change the range setting.

Front Panel Operation: DMM or Channel (Configure) > RANGE

First, select the measurement function on the active channel. You are automatically guided to the next level of the menu where you can select a specific range or autoranging.

Remote Interface Operation: You can select the range using parameters in the `CONFigure` and `MEASure?` commands. For example, the following command selects the 10 Vdc range on the specified channel.

```
CONF:VOLT:DC 10,DEF,(@3001)
```

Measurement Resolution

Resolution is expressed in *number of digits* the internal DMM can measure or display on the front panel. You can set the resolution to 4, 5, or 6 full digits, plus a "½" digit which can be "0" or "1". To increase the measurement accuracy and improve noise rejection, select 6½ digits. To increase the measurement speed, select 4½ digits.

- For ac voltage measurements, the resolution is fixed at 6½ digits. The only way to control the reading rate for ac measurements is by changing the channel delay (see "Channel Delay" on page 181) or by setting the ac filter to the highest frequency limit (see "AC Low Frequency Filter" on page 159).
- The specified resolution is used for all measurements on the selected channel. If you have applied Mx+B scaling, have assigned alarms to the selected channel, or are in Monitor mode, those measurements are also made using the specified resolution.
- Changing the number of digits does more than just change the resolution of the instrument. It also changes *integration time*, which is the measurement sampling period for the instrument's A/D converter. See "Custom A/D Integration Time" on page 145 for more information.

- The `CONFigure` and `MEASure?` commands contain an optional parameter which allows you to specify the resolution.
- The instrument returns to 5½ digits when the measurement function is changed and after a Factory Reset (`*RST` command). An Instrument Preset (`SYSTem:PRESet` command) or Card Reset (`SYSTem:CPON` command) does *not* change the resolution setting.

Front Panel Operation: DMM or Channel (Configure) > INTEGRATION > NPLC

Select the measurement function on the active channel, then select the desired resolution at the next menu level.

Remote Interface Operation: Specify the resolution in the same units as the measurement function, not in number of digits. For example, if the function is dc voltage, specify the resolution in volts. For frequency, specify the resolution in hertz.

You can select the resolution using parameters in the `CONFigure` and `MEASure?` commands. For example, the following command selects the 10 Vdc range with 4½ digits of resolution on the specified channel.

```
CONF:VOLT:DC 10,0.001,(@3001)
```

The following command selects the 1A range with 6½ digits of resolution on channel 2041 (current measurements are allowed only on channels 41 through 44 on the 34921A).

```
MEAS:CURR:AC? 1,1E-6,(@2041)
```

You can also select the resolution using the `SENSe` commands. For example, the following command specifies a 2-wire ohms measurement with 100Ω of resolution on channel 1003.

```
SENS:RES:RES 100,(@1003)
```

Custom A/D Integration Time

Integration time is the period of time the internal DMM's analog-to-digital (A/D) converter samples the input signal for a measurement. Integration time affects the measurement resolution (for better resolution, use a longer integration time) and measurement speed (for faster measurements, use a shorter integration time). The default integration time is 1 PLC.

- Integration time is specified in number of *power line cycles* (PLCs). Select from 0.02, 0.2, 1, 2, 10, 20, 100, or 200 power line cycles.
- Only integral number of power line cycles (1, 2, 10, 20, 100, or 200 PLCs) provide normal mode (line frequency noise) rejection.
- You can also specify integration time in seconds (this is called *aperture time*). Select a value from 300 µs and 1 second, with 4 µs resolution.
- The only way to control the reading rate for ac measurements is by changing the channel delay (see "Channel Delay" on page 181) or by setting the ac filter to the highest frequency limit (see "AC Low Frequency Filter" on page 159).
- The specified integration time is used for all measurements on the selected channel. If you have applied Mx+B scaling, have assigned alarms to the selected channel or are using Monitor mode, those measurements are also made using the specified integration time.
- The following table shows the relationship between integration time, measurement resolution, number of digits, and number of bits.

Integration Time	Resolution	Digits	Bits
0.02 PLC	< 0.0001 x Range	4½ Digits	15
0.2 PLC	< 0.00001 x Range	5½ Digits	18
1 PLC	**< 0.000003 x Range**	**5½ Digits**	**20**
2 PLC	< 0.0000022 x Range	6½ Digits	21
10 PLC	**< 0.000001 x Range**	**6½ Digits**	**24**
20 PLC	< 0.0000008 x Range	6½ Digits	25
100 PLC	< 0.0000003 x Range	6½ Digits	26
200 PLC	< 0.00000022 x Range	6½ Digits	26

- The instrument selects 1 PLC when the measurement function is changed and after a Factory Reset (`*RST` command). An Instrument Preset (`SYSTem:PRESet`

command) or Card Reset (`SYSTem:CPON` command) does *not* change the integration time setting.

Front Panel Operation: DMM or Channel (Configure) > INTEGRATION > TIME

First, select the measurement function on the active channel. You are automatically guided to the next level of the menu where you can select a specific integration time.

Remote Interface Operation: You can set the integration time using the `SENSe` commands. For example, the following command specifies an aperture time of 2 ms for resistance measurements on channel 2001.

```
SENS:RES:APER 0.002,(@2001)
```

Autozero

When autozero is *enabled* (default), the instrument internally disconnects the input signal following each measurement, and takes a *zero* reading. It then subtracts the zero reading from the preceding reading. This prevents offset voltages present on the instrument's input circuitry from affecting measurement accuracy.

When autozero is *disabled*, the instrument takes one zero reading and subtracts it from all subsequent measurements. It takes a new zero reading each time you change the function, range, or integration time.

- Applies to dc voltage, resistance, temperature, and dc current measurements only.
- The autozero mode is set indirectly when you set the resolution and integration time. Autozero is automatically turned off when you select an integration time less than 1 PLC.
- The `CONFigure` and `MEASure?` commands automatically enable autozero.
- The autozero setting is stored in non-volatile memory, and does not change when power has been off, after a Factory Reset (`*RST` command), or after an Instrument Preset (`SYSTem:PRESet` command).

Front Panel Operation: DMM or Channel (Configure) > AUTO ZERO

Remote Interface Operation: The OFF and ONCE parameters have a similar effect. Autozero OFF does *not* issue a new zero measurement. Autozero ONCE issues an immediate zero measurement.

```
[SENSe:]<function>:ZERO:AUTO {OFF|ONCE|ON} [,(@<ch_list>)]
```

Trigger Delay

In some applications, you want to allow the input to settle before taking a reading or for pacing a burst of readings. You can add a *trigger delay*, which adds a delay between the trigger signal and the first sample taken by the internal DMM (not used in Scanning Mode). The programmed trigger delay overrides the default trigger delay that the instrument automatically adds to the measurement.

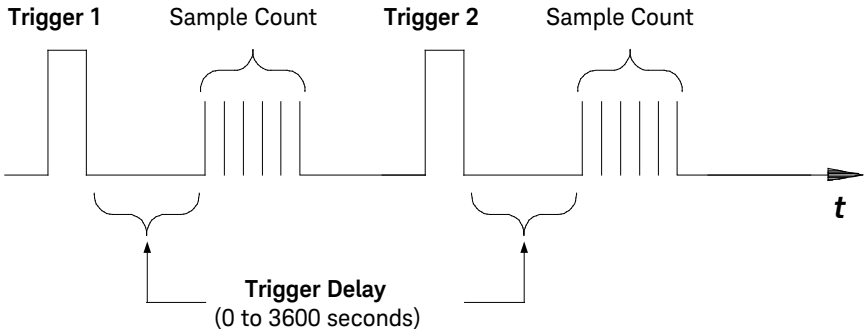

Trigger delay

- The default trigger delay is Automatic (see "Automatic Trigger Delays" on page 148); the instrument determines the delay based on function, range, and integration time.
- If you specify a trigger delay other than Automatic, that same delay is used for all functions and ranges.
- If you have configured the instrument to take more than one reading per trigger (sample count > 1), the specified trigger delay is inserted between the trigger and the first reading in the sample burst.
- The `CONFigure` and `MEASure?` commands set the trigger delay to Automatic.
- The instrument selects an automatic trigger delay after a Factory Reset (`*RST` command). An Instrument Preset (`SYSTem:PRESet` command) or Card Reset (`SYSTem:CPON` command) does *not* change the setting.

Automatic Trigger Delays

If you do not specify a trigger delay, the instrument selects a delay for you. The delay is determined by the function, range, integration time, and ac filter setting as shown below.

DC Voltage, Thermocouple, DC Current (for all ranges):

Integration Time	Trigger Delay
PLC > 1	2.0 ms
PLC ≤ 1	1.0 ms

Resistance, RTD, Thermistor (2- and 4-wire):

Range	Trigger Delay (for PLC > 1)	Trigger Delay (for PLC ≤ 1)
100Ω	2.0 ms	1.0 ms
1 kΩ	2.0 ms	1.0 ms
10 kΩ	2.0 ms	1.0 ms
100 kΩ	25 ms	20 ms
1 MΩ	30 ms	25 ms
10 MΩ	200 ms	200 ms
100 MΩ	200 ms	200 ms

AC Voltage, AC Current (for all ranges):

AC Filter	Trigger Delay
Slow (3 Hz)	7.0 seconds
Medium (20 Hz)	1.0 second
Fast (200 Hz)	120 ms

Frequency, Period:

AC Filter	Trigger Delay
Slow (3 Hz)	600 ms
Medium (20 Hz)	300 ms
Fast (200 Hz)	100 ms

Digital Input, Totalize:

Trigger Delay
0 seconds

Safety Interlock

The *Safety Interlock* feature prevents connections to the Analog Buses if no terminal block or properly-wired cable is connected to a module (available on multiplexer and matrix modules only).

Normally, if you attempt to connect to the Analog Buses without a terminal block or properly-wired cable connected, an error is generated. You can, however, *temporarily* disable errors generated by the Safety Interlock feature. This simulation mode may be useful during test system development when you may not have connected any terminal blocks or cables to your module.

This feature is available from the remote interface only

CAUTION **The Safety Interlock feature is implemented in hardware on the modules and cannot be circumvented. Regardless of whether the simulation mode is enabled or disabled, all Analog Bus connections are prohibited as long as no terminal block or properly-wired cable is connected to the module.**

- The simulation mode applies to the entire mainframe and cannot be selectively used on individual modules.
- When the simulation mode is enabled, the Analog Bus relays will *appear* to close and open as directed. For example, no errors are generated if you close an Analog Bus relay from the front panel, remote interface, or Web Interface. However, remember that the Safety Interlock feature prevents the actual hardware state of the Analog Bus relays from being changed. When you connect a terminal block or cable to the module, the Analog Bus relays will be closed.
- The simulation setting is stored in volatile memory and will be lost when power is turned off. To re-enable the simulation mode after power has been off, you must send the command again.

Remote Interface Operation: `SYSTem:ABUS:INTerlock:SIMulate {OFF|ON}`

User-Defined Channel Labels

You can assign user-defined labels to any channel, including Analog Bus channels on the multiplexer and matrix modules. User-defined channel labels are available for identification purposes *only* and cannot be used in place of a channel number within a command string.

- When shipped from the factory, each channel is assigned a unique factory-default label (cannot be overwritten). From the front panel, the factory-default labels are shown on the upper line of the display (e.g., “MUX CH BANK 1”, “MATRIX1 ROW3 COL4”, “DIO BYTE 1”, etc.). From the Web Interface, the factory-default labels are displayed as the channel number (e.g., “1001”, “3020”, etc.).
- If desired, you can assign the same user-defined label to multiple channels within the same module or on different modules (i.e., channel labels are not required to be unique).
- You can specify a label with up to 18 characters. You can use letters (A-Z), numbers (0-9), and the underscore character. If you specify a label with more than the allowed 18 characters, it will be truncated (no error is generated).
- From the Web Interface, a limited number of characters can be displayed due to space constraints in the browser window. If the user-defined label it too long to be displayed properly, it will be truncated (no error is generated).
- The instrument keeps a record of what module types are installed in each slot. If a different module type is detected in a specific slot at power on, all user-defined channel labels for that slot are discarded. If an empty slot is detected at power-on, any previously-defined labels for that slot are preserved and will be restored if the same module type is installed later; however, if a module of a different type is installed in that slot, the previously-defined labels will be discarded.
- All user-defined channel labels are stored in non-volatile memory, and do not change when power has been off, after a Factory Reset (`*RST` command), after an Instrument Preset (`SYSTem:PRESet` command), or after a stored state is recalled (`*RCL` command).

Front Panel Operation: Channel (Configure) > CHANNEL LABEL

To define the channel label, press the arrow keys to move the cursor to a specific position and then turn the knob to select the desired letter or number.

To clear the channel label on the selected channel, change each character to "^" (starting with the rightmost character) and then press the left arrow key to move to the next character.

To clear all channel labels on the selected module, navigate to:

Module (Configure) > CLEAR LABELS? > YES

Remote Interface Operation: The following command assigns a label ("TEST_PT_1") to channel 3 in slot 1.

```
ROUT:CHAN:LABEL "TEST_PT_1",(@1003)
```

The following command clears the user-defined label previously assigned to channel 3 in slot 1. The channel will now be identified by its factory default label (e.g., "MUX CH BANK 1", "MATRIX1 ROW3 COL4", "DIO BYTE 1", etc.).

```
ROUT:CHAN:LABEL "",(@1003)
```

The following command clears all user-defined channel labels on the module in slot 1. The factory-default labels are assigned to all channels on the module in slot 1.

```
ROUT:CHAN:LABEL:CLEAR:MOD 1
```

The following command clears all user-defined labels on all modules installed in the 34980A. The factory-default labels are assigned to all channels on all installed modules.

```
ROUT:CHAN:LABEL:CLEAR:MOD ALL
```

2-Wire Versus 1-Wire Mode

You can configure the 34923A, 34925A, and 34933A modules for 2-wire (differential) or 1-wire (single ended) measurements. Detailed instructions for these configuration options can be found in the individual User's Guides of the modules. If you change the module configuration, you must cycle power on the 34980A to activate the new setting.

- To determine whether the module is in the 2-wire or 1-wire configuration, check the module description shown on the front panel when the module is selected, or send the `SYSTem:CTYPe?` or `SYSTem:CDEScription?` command. For example, the `SYSTem:CTYPe?` response for the 34923A will be either "34923A" (differential mode) or "34923A-1W" (single-ended mode).
- If you are using terminal blocks with these modules, be sure to use the corresponding 2-wire or 1-wire terminal block.
- The module configuration is stored in non-volatile memory on the module and does not change when you remove the module from the mainframe, after a Factory Reset (`*RST` command), or after an Instrument Preset (`SYSTem:PRESet` command).

Front Panel Operation: Module (Configure) > MODE NEXT POWER-ON

After selecting the 2-wire ("WIRE2") or 1-wire ("WIRE1"), you must cycle power on the 34980A to activate the new setting.

Remote Interface Operation: The following command selects the 1-wire configuration on the module in slot 3. The new configuration will not take effect until you cycle power on the 34980A.

```
SYST:MOD:WIRE:MODE WIRE1,3
```

Temperature Measurement Configuration

This section contains information to help you configure the instrument for making temperature measurements. The table below shows the thermocouple, RTD, and thermistor types for which the instrument supports direct measurements.

Thermocouple Types[a]	RTD Types	Thermistor Types
B, E, J, K, N, R, S, T	R_0 = 49Ω to 2.1 kΩ α = 0.00385 (DIN/IEC 751)[a] α = 0.00391[b]	2.2 kΩ, 5 kΩ, 10 kΩ (YSI 44000 Series)

[a] Using ITS-90 software conversions

[b] Using ITPS-68 software conversions

Measurement Units

The instrument can report temperature measurements in °C (Celsius), °F (Fahrenheit), or K (Kelvins). You can mix temperature units on different channels within the instrument and on the same module.

- The `CONFigure` and `MEASure?` commands automatically select °C.
- Setting the Mx+B measurement label to °C, °F, or K has *no* effect on the temperature measurement units currently selected.
- The instrument selects Celsius when the probe type is changed and after a Factory Reset (`*RST` command). An Instrument Preset (`SYSTem:PRESet` command) or Card Reset (`SYSTem:CPON` command) does *not* change the units setting.

Front Panel Operation: DMM or Channel (Configure) > TEMPERATURE > UNITS

Remote Interface Operation: `UNIT:TEMP {C|F|K}[,(@<ch_list>)]`

Thermocouple Measurements

The instrument supports the following thermocouple types: B, E, J, K, N, R, S, and T using ITS-90 software conversions. *The default is a J-Type thermocouple.*

- Thermocouple measurements require a reference junction temperature. For the reference junction temperature, you can use an internal measurement on the module (34921A only), an external thermistor or RTD measurement, or a known fixed junction temperature.
  - The *internal* reference junction source is valid only on channels 1 through 40 on the 34921A with the 34921T terminal block installed.
  - If you select an *external* reference, the instrument makes thermocouple measurements relative to a previously-stored RTD or thermistor measurement stored in a reference register. To store a reference temperature, first configure a multiplexer channel for an RTD or thermistor measurement. Then assign the measurement from that channel as the external reference. When you initiate a measurement on an external reference channel, the acquired temperature is stored in volatile memory in the reference register. Subsequent thermocouple measurements use the stored temperature as their reference. The temperature remains in memory until you measure a subsequent external reference value in the reference register or remove the mainframe power.
  - If you select a *fixed* reference temperature, specify a value between -20 °C and +80 °C (always specify the temperature in °C regardless of the temperature units currently selected).
- The accuracy of the measurement is highly dependent upon the thermocouple connections and the type of reference junction used. Use a fixed temperature reference for the highest accuracy measurements (you must maintain the known junction temperature). The internal isothermal block reference (34921A only) requires no external wiring but provides lower accuracy measurements than a fixed reference.
- The *thermocouple check* feature allows you to verify that your thermocouples are properly connected for measurements. If you enable this feature, the instrument measures the channel resistance after each thermocouple measurement to ensure a proper connection. If an open connection is detected (greater than 5 kΩ on the 10 kΩ range), the instrument reports an overload condition for that channel (or displays “OPEN T/C” on the front panel).

Front Panel Operation: To select the thermocouple function on the active channel, choose the following items.

DMM or Channel (Configure) > TEMPERATURE > PROBE TYPE > THERMOCOUPLE

Then, use the knob to select the thermocouple type from the list.

THERMOCOUPLE TYPE > B|E|J|K|N|R|S|T

If desired, you can enable the thermocouple check feature on the active channel (opens are reported as “OPEN T/C”).

T/C CHECK > OFF|ON

To select the reference junction source for the active channel, choose one of the following items.

REFERENCE > FIXED|EXT|INT

For an external reference, configure an RTD or thermistor as the external reference channel.

Channel (Configure) > TEMPERATURE > PROBE TYPE > RTD > . . . USE AS EXT REF?

Remote Interface Operation: You can use the `CONFigure` or `MEASure?` command to select the probe type and thermocouple type. For example, the following command configures channel 3001 for a J-type thermocouple measurement.

```
CONF:TEMP TC,J,(@3001)
```

You can also use the `SENSe` command to select the probe type and thermocouple type. For example, the following command configures channel 2003 for a J-type thermocouple measurement.

```
SENS:TEMP:TRAN:TC:TYPE J,(@2003)
```

The following commands use the `SENSe` command to set a fixed reference junction temperature of 40 degrees (always in °C) on channel 2003.

```
SENS:TEMP:TRAN:TC:RJUN:TYPE,(@2003)
SENS:TEMP:TRAN:TC:RJUN 40,(@2003)
```

The following command enables the thermocouple check feature on the specified channel (opens are reported as “+9.90000000E+37”).

```
SENS:TEMP:TRAN:TC:CHECK ON,(@2003)
```

RTD Measurements

The instrument supports RTDs with α = 0.00385 (DIN/IEC 751) using ITS-90 software conversions or α = 0.00391 using IPTS-68 software conversions. The default is α = 0.00385.

- The resistance of an RTD is nominal at 0 °C and is referred to as R_0.
  The instrument can measure RTDs with R_0 values from 49Ω to 2.1 kΩ.
- You can measure RTDs using a 2-wire or 4-wire measurement method. The 4-wire method provides the most accurate way to measure small resistances. Connection lead resistance is automatically removed using the 4-wire method.
- For 4-wire RTD measurements, the instrument automatically pairs channel *n* in Bank 1 with channel ***n+20*** in Bank 2 (34921A, 34923A) or ***n+35*** (34922A, 34924A) to provide the source and sense connections. For example, make the source connections to the HI and LO terminals on channel 2 in Bank 1 and the sense connections to the HI and LO terminals on channel 22 (or 37) in Bank 2.

Front Panel Operation: To select the 2-wire or 4-wire RTD function for the active channel, choose the following items.

DMM or Channel (Configure) > TEMPERATURE > PROBE TYPE > RTD|4W RTD

To select the RTD type (α = 0.00385 or 0.00391) for the active channel, choose the following item.

RTD TYPE > 0.00391|0.00385

To select the nominal resistance (R_0) for the active channel, choose the following item.

RO > 100 OHM

Remote Interface Operation: You can use the `CONFigure` or `MEASure?` command to select the probe type and RTD type. For example, the following command configures channel 3001 for 2-wire measurements of an RTD with α = 0.00385 (use “85” to specify α = 0.00385 or “91” to specify α = 0.00391).

```
CONF:TEMP RTD,85,(@3001)
```

You can also use the `SENSe` command to select the probe type, RTD type, and nominal resistance. For example, the following command configures channel 1003 for 4-wire measurements of an RTD with α = 0.00391 (channel 1003 is automatically paired with channel 1023 for the 4-wire measurement).

```
SENS:TEMP:TRAN:FRTD:TYPE 91,(@1003)
```

The following command sets the nominal resistance (R_0) to 1000Ω on channel 1003.

```
SENS:TEMP:TRAN:FRTD:RES 1000,(@1003)
```

Thermistor Measurements

The instrument supports 2.2 kΩ (YSI Series 44004), 5 kΩ (YSI Series 44007), and 10 kΩ (YSI Series 44006) thermistors.

Front Panel Operation: To select the thermistor function for the active channel, choose the following items.

DMM or Channel (Configure) > TEMPERATURE > PROBE TYPE > THERMISTOR

To select the thermistor type for the active channel, choose from the following items.

THERMISTOR TYPE > 10K|5K|2.2K

Remote Interface Operation: You can use the `CONFigure` or `MEASure?` command to select the probe type and thermistor type. For example, the following command configures channel 3001 for measurements of a 5 kΩ thermistor:

```
CONF:TEMP THER,5000,(@3001)
```

You can also use the `SENSe` command to select the probe type and thermistor type. For example, the following command configures channel 1003 for measurements of a 10 kΩ thermistor:

```
SENS:TEMP:TRAN:THERM:TYPE 10000,(@1003)
```

Voltage Measurement Configuration

This section contains information to help you configure the instrument for making voltage measurements. The instrument can measure dc and true RMS ac-coupled voltages on the measurement ranges shown below.

100 mV	1 V	10 V	100 V	300 V	Autorange

DC Input Resistance

Normally, the instrument's input resistance is fixed at 10 MΩ for all dc voltage ranges to minimize noise pickup. To reduce the effects of measurement loading errors, you can set the input resistance to greater than 10 GΩ for the 100 mVdc, 1 Vdc, and 10 Vdc ranges.

Applies to dc voltage measurements only.

DC Input Resistance Settings for Voltage Measurements:

Input Resistance Setting	Input Resistance for: 100 mV, 1 V, 10 V ranges	Input Resistance for: 100 V, 300 V ranges
Input Resistance: Auto OFF	10 MΩ	10 MΩ
Input Resistance: Auto ON	> 10 GΩ	10 MΩ

- The `CONFigure` and `MEASure?` commands automatically select AUTO OFF (fixed at 10 MΩ for all ranges).
- The instrument selects 10 MΩ (fixed input resistance on all dc voltage ranges) after a Factory Reset (`*RST` command). An Instrument Preset (`SYSTem:PRESet` command) or Card Reset (`SYSTem:CPON` command) does *not* change the input resistance setting.

Front Panel Operation: DMM or Channel (Configure) > INPUT RESISTANCE

Remote Interface Operation: You can enable or disable the automatic input resistance mode on the specified channels or the internal DMM. With AUTO OFF (default), the input resistance is fixed at 10 MΩ for all ranges. With AUTO ON, the input resistance is set to >10 GΩ for the three lowest dc voltage ranges.

```
[SENSe:]<function>:IMPedance:AUTO {OFF|ON} [,(@<ch_list>)]
```

If you omit the optional <ch_list> parameter, the command applies to the internal DMM.

AC Low Frequency Filter

The instrument uses three different ac filters which enable you to either optimize low-frequency accuracy or achieve faster ac settling times. The instrument selects the *slow* (3 Hz), *medium* (20 Hz), or *fast* (200 Hz) filter based on the input frequency that you specify for the selected channels or the internal DMM.

Applies to ac voltage and ac current measurements only.

AC Filter Settings for Voltage Measurements:

Input Frequency	Default Settling Delay	Minimum Settling Delay
3 Hz to 300 kHz (Slow)	7 seconds / reading	1.5 seconds
20 Hz to 300 kHz (Medium)	1 second / reading	200 ms
200 Hz to 300 kHz (Fast)	0.12 seconds / reading	20 ms

- The `CONFigure` and `MEASure?` commands automatically select the 20 Hz (medium) filter.
- The instrument selects the default 20 Hz (medium) filter after a Factory Reset (`*RST` command). An Instrument Preset (`SYSTem:PRESet` command) or Card Reset (`SYSTem:CPON` command) does *not* change the setting.

Front Panel Operation: DMM or Channel (Configure) > AC FILTER

Remote Interface Operation: Specify the lowest frequency expected in the input signal on the specified channels. The instrument selects the appropriate filter based on the frequency you specify (see table above).

```
[SENSe:]VOLTage:AC:BANDwidth {3|20|200} [,(@<ch_list>)]
```

If you omit the optional <ch_list> parameter, the command applies to the internal DMM.

Resistance Measurement Configuration

This section contains information to help you configure the instrument for making resistance measurements. Use the 2-wire method for ease of wiring and higher density or use the 4-wire method for improved measurement accuracy. The measurement ranges shown below.

100Ω	1 kΩ	10 kΩ	100 kΩ	1 MΩ	10 MΩ	100 MΩ	Autorange

Offset Compensation

Offset compensation removes the effects of any dc voltages in the circuit being measured. The technique involves taking the difference between two resistance measurements on the specified channels, one with the current source turned on and one with the current source turned off.

Applies only to 2-wire and 4-wire resistance measurements on the 100Ω, 1 kΩ, and 10 kΩ ranges.

- Four-wire measurements are not allowed on the multiplexer modules configured for the 1-wire (single ended) mode (see page 152).
- For 4-wire resistance measurements, the instrument automatically pairs channel *n* in Bank 1 with channel *n+20* in Bank 2 (34921A, 34923A, 34925A) or *n+35* (34922A, 34924A) to provide the source and sense connections. For example, make the source connections to the HI and LO terminals on channel 2 in Bank 1 and the sense connections to the HI and LO terminals on channel 22 (or 37) in Bank 2.
- The `CONFigure` and `MEASure?` commands automatically disable offset compensation.
- The instrument disables offset compensation after a Factory Reset (`*RST` command). An Instrument Preset (`SYSTem:PRESet` command) or Card Reset (`SYSTem:CPON` command) does *not* change the setting.

Front Panel Operation: DMM or Channel (Configure) > OFFSET COMP

Remote Interface Operation:

```
[SENSe:]FRESistance:OCOMpensated {OFF|ON} [,(@<ch_list>)]
[SENSe:]RESistance:OCOMpensated {OFF|ON} [,(@<ch_list>)]
```

If you omit the optional <ch_list> parameter, the command applies to the internal DMM. For 4-wire measurements, specify the paired channel in Bank 1 (source) as the <ch_list> channel (channels in Bank 2 are not allowed in the <ch_list>).

Current Measurement Configuration

This section contains information to help you configure the instrument for making current measurements on the 34921A multiplexer module. The module has four fused channels for direct dc and ac current measurements on the ranges shown below.

10 mA	100 mA	1 A	Autorange

Current measurements are allowed only on channels 41 through 44 on the 34921A module.

AC Low Frequency Filter

The instrument uses three different ac filters which enable you to either optimize low-frequency accuracy or achieve faster ac settling times. The instrument selects the *slow* (3 Hz), *medium* (20 Hz), or *fast* (200 Hz) filter based on the input frequency that you specify for the selected channels or the internal DMM.

Applies to ac current and ac voltage measurements only.

AC Filter Settings for Current Measurements:

Input Frequency	Default Settling Delay	Minimum Settling Delay
3 Hz to 300 kHz (Slow)	7 seconds / reading	1.5 seconds
20 Hz to 300 kHz (Medium)	1 second / reading	200 ms
200 Hz to 300 kHz (Fast)	0.12 seconds / reading	20 ms

- The `CONFigure` and `MEASure?` commands automatically select the 20 Hz (medium) filter.
- The instrument selects the default 20 Hz (medium) filter after a Factory Reset (`*RST` command). An Instrument Preset (`SYSTem:PRESet` command) or Card Reset (`SYSTem:CPON` command) does *not* change the setting.

Front Panel Operation: DMM or Channel (Configure) > AC FILTER

Remote Interface Operation: Specify the lowest frequency expected in the input signal on the specified channels. The instrument selects the appropriate filter based on the frequency you specify (see table above).

```
[SENSe:]CURRent:AC:BANDwidth {3|20|200} [,(@<ch_list>)]
```

If you omit the optional <ch_list> parameter, the command applies to the internal DMM.

Frequency Measurement Configuration

This section contains information to help you configure the instrument for making frequency measurements.

Low Frequency Timeout

The instrument uses three different timeout ranges for frequency measurements. The instrument selects the *slow* (3 Hz), *medium* (20 Hz), or *fast* (200 Hz) filter based on the input frequency that you specify with this command for the selected channels.

Applies to frequency measurements only.

Timeouts for Specified Frequency Range Settings:

Input Frequency	Timeout
3 Hz to 300 kHz (Slow)	1 second
20 Hz to 300 kHz (Medium)	100 ms
200 Hz to 300 kHz (Fast)	10 ms

- The `CONFigure` and `MEASure?` commands automatically select the 20 Hz (medium) filter.
- The instrument selects the default 20 Hz (medium) filter after a Factory Reset (`*RST` command). An Instrument Preset (`SYSTem:PRESet` command) or Card Reset (**SYSTem:CPON** command) does *not* change the setting.

Front Panel Operation: DMM or Channel (Configure) > AC FILTER

Remote Interface Operation: Specify the lowest frequency expected in the input signal on the specified channels. The instrument selects the appropriate timeout based on the frequency you specify (see table above).

```
[SENSe:]FREQuency:RANGe:LOWer {3|20|200} [,(@<ch_list>)]
```

If you omit the optional <ch_list> parameter, the command applies to the internal DMM.

Mx+B Scaling

The scaling function allows you to apply a *gain* and *offset* to readings during a scan or while making measurements in the stand-alone DMM mode. In addition to setting the gain (“M”) and offset (“B”) values, you can also specify a custom measurement label for your scaled readings (RPM, PSI, etc.). You can apply scaling to any multiplexer channels and for any measurement function. Scaling is not allowed with any of the channels on the digital modules.

- Scaling is applied using the following equation:

  Scaled Reading = (Gain x Measurement) + Offset

- If you change the measurement configuration (function, transducer type, etc.) on a channel or the internal DMM, scaling is turned off on those channels but the gain and offset values are not cleared.
- If you plan to use scaling on a channel which will also use alarms, *be sure to configure the scaling values first*. If you attempt to assign the alarm limits first, the instrument will turn off alarms and clear the limit values when you enable scaling on that channel. If you specify a custom measurement label with scaling, it is automatically used when alarms are logged on that channel.
- If you redefine the scan list, no change will be made to the scaling state or the gain and offset values. If you decide to add a channel back to the scan list, the original gain and offset values are restored.
- You can specify a custom label with up to three characters. You can use letters (A-Z), numbers (0-9), an underscore (_), blank spaces, or the “#” character which displays a degree symbol (°) on the front panel (displayed as a “#” in an output string from the remote interface).
- The maximum value allowed for the gain and offset is ±1E+15.
- The `CONFigure` and `MEASure?` commands automatically set the gain (“M”) to 1 and offset (“B”) to 0.
- A Factory Reset (`*RST` command) turns off scaling, clears the scaling values on all channels, and sets the custom label to a null string (“ ”). An Instrument Preset (`SYSTem:PRESet` command) does *not* clear the scaling values and does *not* turn off scaling.

Front Panel Operation:

DMM or Channel (Configure) > SCALING > GAIN|OFFSET|UNITS

To define the label on the selected channel, press the arrow keys to move the cursor to a specific position and then turn the knob to select the desired letter or number. To clear the label on the selected channel, change each character to "^" (starting with the rightmost character) and then press the left arrow key to move to the next character.

Remote Interface Operation: Use the following commands to set the gain, offset, and custom measurement label.

```
CALC:SCALE:GAIN 1.2,(@1003)
CALC:SCALE:OFFSET 10,(@1003)
CALC:SCALE:UNIT 'PSI',(@1003)
```

After setting the gain and offset values, send the following command to enable the scaling function on the specified channel.

```
CALC:SCALE:STATE ON,(@1003)
```

Scanning

The instrument allows you to combine a DMM (either internal or external) with multiplexer channels to create a *scan*. During a scan, the instrument connects the DMM to the configured multiplexer channels one at a time and makes a measurement on each channel.

WARNING **When working with hazardous voltage levels, intentional closing of multiple bus and channel relays could cause a potential shock hazard on external connections. Use extreme caution when handling, testing and adjusting this instrument. Do not perform these procedures unless qualified to do so. Failure to recognize and observe normal safety precautions could result in personal injury or death.**

WARNING **It is possible to connect more than one voltage level at the same time when using this system. Ensure that hazardous or unwanted conditions are not created by these connections. Failure to recognize or observe normal safety precautions could result in equipment damage and may result in hazardous conditions such as fire or shock and could lead to personal injury or death.**

Any channel that can be “read” by the instrument can also be included in a scan. This includes any combination of temperature, voltage, resistance, current, frequency, or period measurements on multiplexer channels. A scan can also include a read of a digital channel or a read of the totalizer count on the digital modules. Scanning is allowed with the following modules:

- 34921A through 34925A Multiplexer Modules
- 34950A Digital I/O Module (digital input and counter channels only)
- 34952A Multifunction Module (digital input and totalizer channels only)

Automated scanning is not allowed with the other switching modules. In addition, a scan cannot include a write to a digital channel or a voltage output from a DAC channel. You can, however, write your own program to manually create a “scan” to include these operations.

Rules for Scanning

- Before you can initiate a scan, you must set up a scan list to include all desired multiplexer or digital channels. Channels which are not in the scan list are skipped during the scan. By default, the instrument scans the list of channels in ascending order from slot 1 through slot 8 (channels are reordered as needed). If your application requires non-ordered scanning of the channels in the present scan list, see "Non-Sequential Scanning" on page 185. Measurements are taken only during a scan and only on those channels which are included in the scan list.
- You can store at least 500,000 readings in memory and all readings are automatically time stamped. If memory overflows, a status register bit is set and new readings will overwrite the first (oldest) readings stored. The most recent readings are always preserved. You can read the contents of memory at any time, even during a scan. Reading memory is not cleared when you read it.
- Each time you start a new scan, the instrument clears all readings (including alarm data) stored in reading memory from the previous scan. Therefore, the contents of memory are always from the most recent scan.
- The Analog Bus relays are automatically opened and closed as required during the scan to connect to the internal DMM for the measurement. For example, all 2-wire measurements use the ABus1 (MEAS) relays; for 4-wire measurements, the ABus2 (SENS) relays are used in addition to the ABus1 relays.
- When the scan is initiated, the instrument will open all channels in banks that contain one or more channels in the scan list.
- In order to guarantee that no signals are connected to the Analog Buses prior to the scan, the instrument will open <u>all</u> ABus1 relays (applies to all banks in all slots). In banks that contain channels in the scan list, the instrument will also open all ABus2 relays (regardless of whether 4-wire measurements are involved). If no channels configured for 4-wire measurements are included in the scan list, the state of the ABus2 relays in the non-scanned banks is <u>not</u> altered.
- The state of the ABus3 and ABus4 relays is <u>not</u> altered and these relays remain available for use during the scan. However, be sure to use *CAUTION* when closing these relays on banks involved in the scan. While the scan is running, any signals present on ABus3 and/or ABus4 will be joined with the scanned measurement on ABus1 and ABus2.

- While the scan is running, the instrument prevents use of all channels in banks that contain one or more channels in the specified scan list (these channels are dedicated to the scan). In addition, the instrument prevents use of all ABus1 and ABus2 relays on banks containing channels in the scan list. If one or more channels configured for 4-wire measurements are included in the scan list, then the rules for ABus2 relay operations are extended to the non-scanned banks as well.
- If the ABus1 relay used for current measurements (channel 931 on 34921A only) is not closed prior to the initiation of the scan, the four current channels (channels 41 through 44) are not affected by the scan. However, if the ABus1 relay is closed, the instrument will open the ABus1 relay as well as the four associated current channels in a *make-before-break* fashion.
- When you add a digital read (digital modules) to a scan list, the corresponding channel is dedicated to the scan. The instrument issues a Card Reset to make that channel an input channel (the other channel is not affected).
- While the scan is running, you can perform low-level control operations on any channels on the digital modules that are not in the scan. For example, you can output a DAC voltage or write to a digital channel (even if the totalizer is part of the scan list). However, you cannot change any parameters that affect the scan (channel configuration, scan interval, Card Reset, etc.) while a scan is running.
- If a scan includes a read of the totalizer, the count is reset each time it is read during the scan *only* when the totalizer reset mode is enabled.
- At the end of the scan, the last channel that was scanned will be opened (as well as any Analog Bus relays used during the scan).Any channels that were opened during the scan will remain open at the completion of the scan.
- If you abort a scan that is running, the instrument will terminate any reading in progress (readings are not cleared from memory). If a scan is in progress when the command is received, the scan will not be completed and you cannot resume the scan from where it left off. Note that if you initiate a new scan, all readings are cleared from memory.
- You can use either the internal DMM or an external instrument to make measurements of your configured channels. However, the 34980A allows only one scan list at a time; you cannot scan some channels using the internal DMM and others using an external instrument. Readings are stored in 34980A memory only when the internal DMM is used.

- The Monitor mode is automatically enabled on all channels that are part of the active scan list (see "Monitor Mode" on page 189).
- The present scan list is stored in volatile memory and will be lost when power is turned off or after a Factory Reset (`*RST` command).

Adding Channels to the Scan List

Before you can initiate a scan, you must set up a scan list to include all desired multiplexer or digital channels. Channels which are not in the scan list are skipped during the scan. By default, the instrument scans the list of channels in ascending order from slot 1 through slot 8 (channels are reordered as needed).

To Build a Scan List From the Front Panel

- To add the active channel to the scan list, press **Channel (Configure)**. Then select the function, range, resolution, and other parameters for this channel. Then add the channel to the scan list by selecting:

  `SCAN THIS CHANNEL? > YES`

- To remove the active channel from the scan list, select:

  `SCAN THIS CHANNEL? > NO`

- To remove all channels from the scan list, select:

  `Scan (Configure) > CLEAR SCAN LIST? > YES`

- To initiate a scan and store all readings in memory, press `Scan (Measure)`. Each time you initiate a new scan, the instrument clears all previously stored readings. If you have not defined a scan list, `Scan (Measure)` performs an internal DMM scan independent of any channels.
- To stop a scan in progress, press and hold `Scan (Measure)`.

To Build a Scan List From the Remote Interface

- Use the `ROUTe:SCAN` command to define the list of channels in the scan list. To determine what channels are currently in the scan list, use the `ROUTe:SCAN?` query command.
- To add channels to the present scan list, use the `ROUTe:SCAN:ADD` command. To remove channels from the present scan list, use the `ROUTe:SCAN:REMove` command.
- To remove all channels from the scan list, send "`ROUT:SCAN (@)`".
- To initiate a scan, use the `INITiate` or `READ?` command. Measurements are stored in memory. Each time you initiate a new scan, the instrument will clear the previous set of readings from memory.
- To stop a scan in progress, use the `ABORt` command.

Scan Trigger Source

You can configure the event or action that controls the onset of each sweep through the scan list (a *sweep* is one pass through the scan list):

- You can set the instrument's internal timer to automatically scan at a specific interval. You can also program a time delay between channels in the scan list (see "Channel Delay" on page 181).
- You can manually control a scan by repeatedly pressing the **Scan (Measure)** key from the front panel.
- You can start a scan by sending a software command from the remote interface (`MEASure?` or `INITiate` command).
- You can start a scan when an external TTL trigger pulse is received.
- You can start a scan when an alarm event is logged on the channel being monitored.

Interval Scanning

In this configuration, you control the frequency of scan sweeps by selecting a wait period from the start of one trigger to the start of the next trigger (called the *trigger-to-trigger interval*). If the scan interval is less than the time required to measure all channels in the scan list, the instrument will scan continuously, as fast as possible (no error is generated).

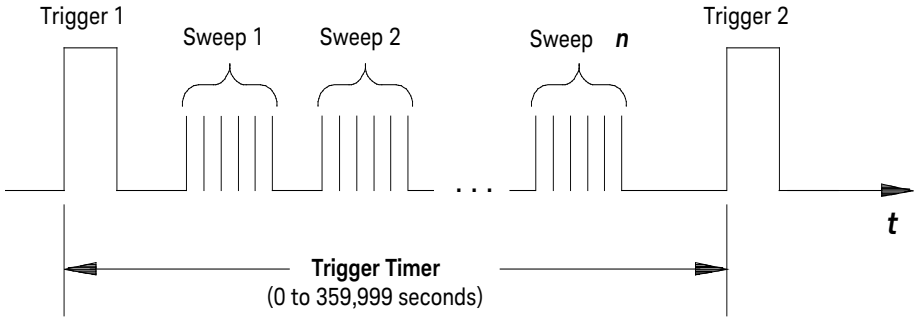

Trigger-to-trigger interval

- You can set the scan interval to any value between 0 seconds and 99:59:59 hours (359,999 seconds), with 1 ms resolution.

- Once you have initiated the scan, the instrument will continue scanning until you stop it or until the trigger count is reached. See "Trigger Count" on page 177 for more information.
- Mx+B scaling and alarm limits are applied to measurements during a scan and all data is stored in volatile memory.
- The `CONFigure` and `MEASure?` commands automatically set the scan interval to immediate (0 seconds) and the scan count to 1 sweep.
- The instrument sets the scan interval to immediate (0 seconds) after a Factory Reset (`*RST` command). An Instrument Preset (`SYSTem:PRESet` command) or Card Reset (`SYSTem:CPON` command) does *not* change the setting.

Front Panel Operation: Scan (Configure) > INTERVAL > SCAN INTERVAL

To initiate the scan and store all readings in memory, press the **Scan (Measure)** key. Between scan sweeps, "WAITING FOR TRIG" will be displayed on the front panel.

Note: To stop a scan, press and hold the **Scan (Measure)** key.

Remote Interface Operation: The following program segment configures the instrument for an interval scan.

```
TRIG:SOURCE TIMER        Select interval time mode
TRIG:TIMER 5             Set the scan interval to 5 seconds
TRIG:COUNT 2             Sweep the scan list 2 times
INIT                     Initiate the scan
```

Note: To stop a scan, send the `ABORt` command.

Manual Scanning

In this configuration, the instrument waits for either a front-panel key press or a remote interface command before sweeping through the scan list.

- All readings from the scan are stored in volatile memory. Readings accumulate in memory until the scan is terminated (until the trigger count is reached or until you abort the scan).

- You can specify a trigger count which sets the number of front-panel key presses or scan trigger commands that will be accepted before terminating the scan. See "Trigger Count" on page 177 for more information.
- Mx+B scaling and alarm limits are applied to measurements during a manual scanning operation and all data is stored in volatile memory.

Front Panel Operation: **Scan (Configure) > INTERVAL > MANUAL**

To initiate the scan and store all readings in memory, press the **Scan (Measure)** key.

Note: To stop a scan, press and hold the **Scan (Measure)** key.

Remote Interface Operation: The following program segment configures the instrument for a manual scanning operation.

```
TRIG:SOURCE BUS          Select bus (manual) mode
TRIG:COUNT 2             Sweep the scan list 2 times
INIT                     Initiate the scan
```

Then, send the `*TRG` (trigger) command to begin each scan sweep. The `*TRG` command will not be accepted unless the internal DMM is in the "wait-for-trigger" state.

Note: To stop a scan, send the `ABORt` command.

Scanning on Alarm

In this configuration, the instrument initiates a scan each time a reading crosses an alarm limit on a channel. You can also assign alarms to channels on the digital modules (34950A and 34952A). For example, you can generate an alarm when a specific bit pattern or bit pattern change is detected on a digital input channel or when a specific count is reached on a totalizer channel.

NOTE For complete details on configuring and using alarms, refer to "Alarm Limits" on page 194.

- In this scan configuration, you may use the Monitor function to continuously take readings on a selected channel and wait for an alarm on that channel. Channels do not have to be part of an active scan list to be monitored; however, the channel must be configured for a measurement in order to be monitored.
- All readings from the scan are stored in volatile memory. Readings accumulate in memory until the scan is terminated (until the trigger count is reached or until you abort the scan).
- You can specify a trigger count which sets the number of front-panel key presses or scan trigger commands that will be accepted before terminating the scan. See "Trigger Count" on page 177 for more information.
- Mx+B scaling and alarm limits are applied to measurements during a manual scanning operation and all data is stored in volatile memory.

Front Panel Operation: Scan (Configure) > ALARM

To enable the Monitor function, select the desired channel and then press the DMM or Channel (Measure) key. To initiate the scan, press the Scan (Measure) key. When an alarm occurs, the scan starts and readings are stored in memory.

Note: To stop a scan, press and hold the Scan (Measure) key.

You can also configure whether the instrument sweeps through the scan list one time or continuously when an alarm condition is detected:

Scan (Configure) > ALARM > ALARM TRIG MODE > SINGLE|CONTIN

Remote Interface Operation: The following program segment configures the instrument to continuously scan when an alarm is detected.

```
TRIG:SOURCE ALARM1                    Select alarm configuration
TRIG:SOURCE:ALARM CONT                Select continuous scan mode

CALC:LIM:UPPER 10.25,(@1003)          Set upper alarm limit
CALC:LIM:UPPER:STATE ON,(@1003)       Enable alarms
OUTPUT:ALARM1:SOURCE (@1003)          Report alarms on Alarm 1

ROUT:MON:CHAN (@1003)                 Select monitor channel
ROUT:MON:CHAN:ENABLE ON,(@1003)       Enable monitoring on channel
ROUT:MON:STATE ON                     Enable monitor mode

INIT                                  Initiate the scan
```

Note: To stop a scan, send the `ABORt` command.

External Scanning

In this configuration, the instrument sweeps through the scan list once each time a low-going TTL pulse is received on the rear-panel *Ext Trig Input* line (pin 6).

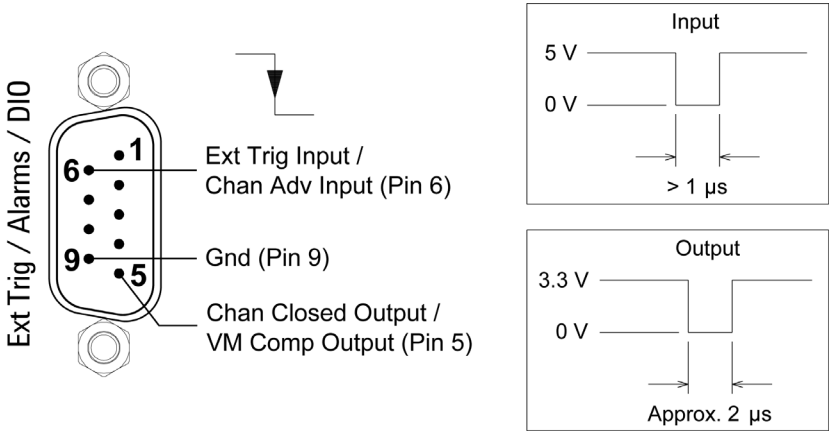

Ext Trig Input connector (as viewed from rear of instrument)

– You can specify a scan count which sets the number of external pulses the instrument will accept before terminating the scan. See "Trigger Count" on page 177 for more information.

- If the instrument receives an external trigger before it is ready to accept one, it will buffer one trigger and then ignore any additional triggers received (no error is generated).
- All readings from the scan are stored in volatile memory. Readings accumulate in memory until the scan is terminated (until the scan count is reached or until you abort the scan).
- Mx+B scaling and alarm limits are applied to measurements during the scan and all data is stored in volatile memory.

Front Panel Operation: Scan (Configure) > INTERVAL > EXTERNAL

To initiate the scan and store all readings in memory, press the **Scan (Measure)** key. Between scan sweeps, "WAITING FOR TRIG" will be displayed on the front panel. When a TTL pulse is received, the scan starts and readings are stored in memory.

Note: To stop a scan, press and hold the **Scan (Measure)** key.

Remote Interface Operation: The following program segment configures the instrument for an external scan.

```
TRIG:SOURCE EXT          Select external mode
TRIG:COUNT 2             Sweep the scan list 2 times
INIT                     Initiate the scan
```

Note: To stop a scan, send the `ABORt` command.

Trigger Count

You can specify the number of triggers that will be accepted by the internal DMM before returning to the "idle" state. The trigger count applies to both scanning and stand-alone DMM measurements (with no scan list).

- Select a trigger count between 1 and 500,000 triggers, or continuous.
- You can store at least 500,000 readings in memory and all readings are automatically time stamped. If memory overflows, the new readings will overwrite the first (oldest) readings stored; the most recent readings are always preserved.
- You can specify a trigger count in conjunction with a sample count and a sweep count. The three parameters operate independent of one another, and

the total number of readings returned will be the product of the three parameters.

- The `CONFigure` and `MEASure?` commands automatically set the scan trigger count to 1.
- The instrument sets the scan trigger count to 1 after a Factory Reset (`*RST` command). An Instrument Preset (`SYSTem:PRESet` command) or Card Reset (`SYSTem:CPON` command) does *not* change the setting.

Front Panel Operation: Scan (Configure) > SCAN TRIGGER > COUNTED|INFINITE

Remote Interface Operation: `TRIGger:COUNt`

To configure a continuous scan, send `TRIG:COUNT INFINITY`.

Sweep Count

The sweep count sets the number of sweeps per trigger event during a scan (a *sweep* is one pass through the scan list). The front-panel sample annunciator ("*") turns on during each measurement.

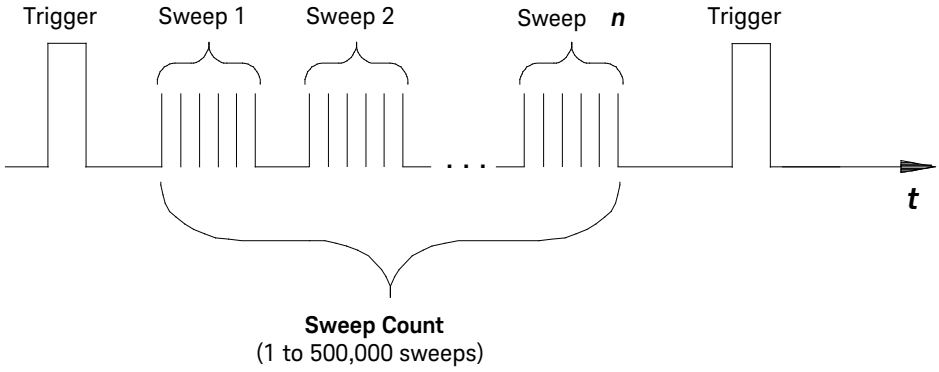

Sweep count

- The sweep count is valid only while scanning. If no channels have been assigned to the scan list, the specified sweep count is ignored (no error is generated).

- You can specify a sweep count in conjunction with a trigger count and a sample count. The three parameters operate independent of one another, and the total number of readings returned will be the product of the three parameters.
- You can store at least 500,000 readings in memory and all readings are automatically time stamped. If memory overflows, the new readings will overwrite the first (oldest) readings stored; the most recent readings are always preserved.
- The `CONFigure` and `MEASure?` commands automatically set the sweep count to 1 sweep.
- The instrument sets the sweep count to 1 after a Factory Reset (`*RST` command). An Instrument Preset (`SYSTem:PRESet` command) or Card Reset (`SYSTem:CPON` command) does *not* change the setting.

Front Panel Operation: **Scan (Configure) > SWEEP COUNT**

Remote Interface Operation: `SWEep:COUNt`

Sample Count

The sample count sets the number of auto-triggered samples the internal DMM will take per channel per trigger. The sample count applies to both scanning and stand-alone DMM measurements (with no scan list). The front-panel sample annunciator ("*") turns on during each measurement.

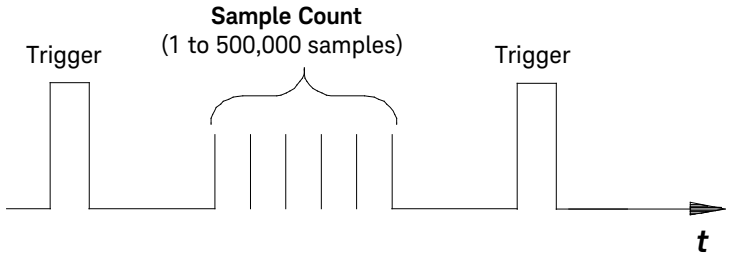

Sample count for Stand-Alone DMM Mode

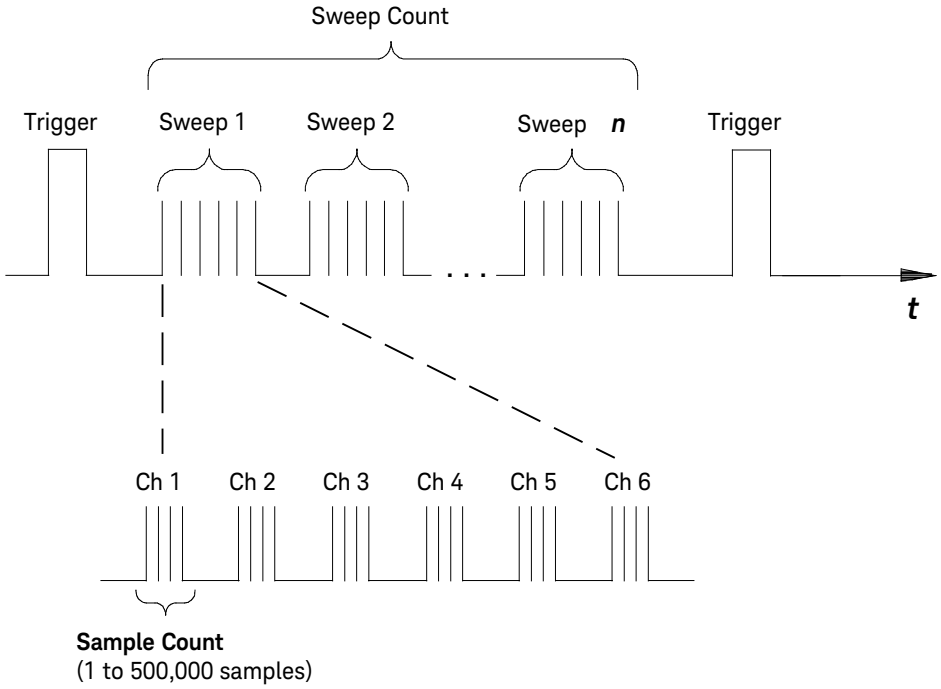

Sample count for Scanning Mode

- For scanning, the specified sample count sets the number of readings per channel (same for all channels in the scan list). If no channels have been assigned to the scan list, the sample count sets the number of readings per trigger for the internal DMM.
- You can specify a sample count in conjunction with a trigger count and a sweep count. The three parameters operate independent of one another, and the total number of readings returned will be the product of the three parameters.
- You can store at least 500,000 readings in memory and all readings are automatically time stamped. If memory overflows, the new readings will overwrite the first (oldest) readings stored; the most recent readings are always preserved.

- The `CONFigure` and `MEASure?` commands automatically set the sample count to 1.
- The instrument sets the sample count to 1 after a Factory Reset (`*RST` command). An Instrument Preset (`SYSTem:PRESet` command) or Card Reset (`SYSTem:CPON` command) does *not* change the setting.

Front Panel Operation: Scan (Configure) > SAMPLE COUNT

Remote Interface Operation: `SAMPle:COUNt`

Channel Delay

You can control the pacing of a scan sweep by inserting a delay between multiplexer channels in the scan list (useful for high-impedance or high-capacitance circuits). The delay is inserted between the relay closure and the actual measurement on the channel, in addition to any delay that will implicitly occur due to relay settling time. The programmed channel delay overrides the default channel delay that the instrument automatically adds to each channel.

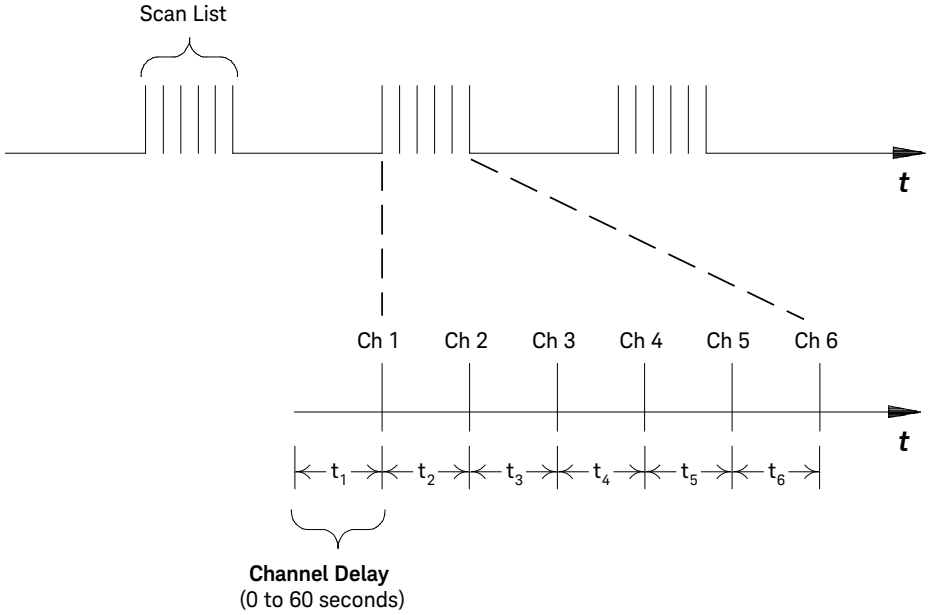

Channel delay

- You can set the channel delay to any value between 0 seconds and 60 seconds, with 1 ms resolution. You can select a different delay for each channel. The default channel delay is automatic; the instrument determines the delay based on function, range, integration time, and ac filter setting (see "Automatic Channel Delays" on page 182).
- You can select a unique delay for every channel on the module.
- The channel delay is valid only while scanning. If no channels have been assigned to the scan list, the specified channel delay is ignored (no error is generated).
- To ensure you are getting the most accurate measurements possible, use care when setting the channel delay less than the default value (automatic). The default channel delay is designed to optimize parameters, such as settling time, for the most accurate measurements.
- The `CONFigure` and `MEASure?` commands set the channel delay to automatic. A Factory Reset (`*RST` command) also sets the channel delay to automatic.

Front Panel Operation: Channel (Configure) > CHANNEL DELAY > TIME

Once you have added the specified channel to the scan list, the channel delay choice will be visible in the menu.

Interface Operation: The following command add a 2-second channel delay to the specified channels.

```
ROUT:CHAN:DELAY 2,(@1003,1013)
```

Automatic Channel Delays

If you do not specify a channel delay, the instrument selects a delay for you. The delay is determined by the delay based on function, range, integration time, and ac filter setting.

DC Voltage, Thermocouple, DC Current (for all ranges):

Integration Time	Channel Delay
PLC > 1	2.0 ms
PLC ≤ 1	1.0 ms

Resistance, RTD, Thermistor (2- and 4-wire):

Range	Channel Delay (for PLC > 1)	Channel Delay (for PLC ≤ 1)
100Ω	2.0 ms	1.0 ms
1 kΩ	2.0 ms	1.0 ms
10 kΩ	2.0 ms	1.0 ms
100 kΩ	25 ms	20 ms
1 MΩ	30 ms	25 ms
10 MΩ	200 ms	200 ms
100 MΩ	200 ms	200 ms

AC Voltage, AC Current (for all ranges):

AC Filter	Channel Delay
Slow (3 Hz)	7.0 seconds
Medium (20 Hz)	1.0 second
Fast (200 Hz)	120 ms

Frequency, Period:

AC Filter	Channel Delay
Slow (3 Hz)	600 ms
Medium (20 Hz)	300 ms
Fast (200 Hz)	100 ms

Digital Input, Totalize:

Channel Delay
0 seconds

Front Panel Operation: **Channel (Configure) > CHANNEL DELAY > AUTO**

Once you have added the specified channel to the scan list, the channel delay choice will be visible in the menu.

Interface Operation: The following command enables an automatic channel delay on the specified channels.

```
ROUT:CHAN:DELAY:AUTO ON,(@1003,1013)
```

Selecting a specific channel delay using the `ROUTe:CHANnel:DELay` command (see "Channel Delay" on page 181) disables the automatic channel delay.

Reading Format

During a scan, the instrument automatically adds a time stamp to all readings and stores them in memory. Each reading is stored with measurement units, time stamp, channel number, and alarm status information. From the remote interface, you can specify which information you want returned with the readings. The examples below show a reading in *relative* and *absolute* format with all fields enabled.

Relative Format (Default):

```
2.61950000E+01   C,000000000.017,1003,2
```

1 2 3 4

1	Reading with units (26.195 °C)	**3**	Channel number
2	Time since start of scan (17 ms)	**4**	Alarm limit threshold crossed (0 = No Alarm, 1 = LO, 2 = HI)

Absolute Format:

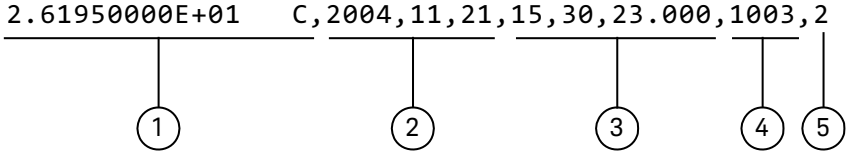

1	Reading with units (26.195 °C)	**4**	Channel number
2	Date (November 21, 2004)	**5**	Alarm limit threshold crossed (0 = No Alarm, 1 = LO, 2 = HI)
3	Time of day (3:30:23.000 PM)		

- The reading format applies to all readings being removed from the instrument from a scan; you cannot set the format on a per-channel basis.
- The `CONFigure` and `MEASure?` commands automatically turn off the units, time, channel, and alarm information.
- The format settings are stored in volatile memory and will be lost when power is turned off or after a Factory Reset (`*RST` command).

Remote Interface Operation: Use the following commands to select the reading format.

```
FORMat:READing:ALARm ON
FORMat:READing:CHANnel ON
FORMat:READing:TIME ON
FORMat:READing:TIME:TYPE {ABSolute|RELative}
FORMat:READing:UNIT ON
```

Non-Sequential Scanning

By default, the instrument scans the list of channels in ascending order from slot 1 through slot 8 (channels are reordered as needed). If your application requires non-ordered scanning of the channels in the present scan list, you can use the *non-sequential* scanning mode.

This feature is available from the remote interface only.

- The scanning mode applies to the entire mainframe and cannot be selectively used on individual modules.

- When sequential scanning is enabled (default), the channels in the scan list are placed in ascending order from slot 1 through slot 8. Duplicate channels are not allowed. For example, (@2001,1003,1001,1003) will be interpreted as (@1001,1003,2001).
- When sequential scanning is disabled (OFF), the channels remain in the order presented in the scan list (see exception below). Multiple occurrences of the same channel are allowed. For example, (@2001,2001,2001) and (@3010,1003,1001,1005) are valid and the channels will be scanned in the order presented.
- When you specify a *range* of channels in the scan list, the channels are always sorted in ascending order, regardless of the scan order setting. Therefore, (@1009:1001) will always be interpreted as 1001, 1002, 1003, etc.
- If you define a scan list with the sequential mode enabled and later disable the mode, the scan list will not be reordered; however, the scan list will be treated as a non-sequential list thereafter.
- If you have defined a scan list with the sequential mode disabled (OFF) and later enable the mode, the channels will be reordered.
- Non-sequential scan lists are not stored as part of the instrument state by the `*SAV` command; in this case, the ordered mode will be enabled and the scan list will be empty when the instrument state is restored (`*RCL` command).
- The scan order setting is stored in volatile memory and the ordered mode will be enabled when power is turned off or after a Factory Reset (`*RST` command).

Remote Interface Operation: `ROUTe:SCAN:ORDered {OFF|ON}`

Viewing Readings Stored in Memory

- During a scan, the instrument automatically adds a time stamp to all readings and stores them in memory. You can read the contents of memory at any time, even during a scan. Reading memory is not cleared when you read it.
- This feature is available from the remote interface only.
- You can store at least 500,000 readings in memory and all readings are automatically time stamped. If memory overflows, a status register bit is set and new readings will overwrite the first (oldest) readings stored. The most recent readings are always preserved.
- Each time you start a new scan, the instrument clears all readings (including alarm data) stored in reading memory from the previous scan. Therefore, the contents of memory are always from the most recent scan.
- The instrument clears all readings from memory after a Factory Reset (`*RST` command), after an Instrument Preset (`SYSTem:PRESet` command), or when mainframe power is cycled.
- The instrument clears all readings from memory when a new scan is initiated, when any measurement parameters are changed (`CONFigure` and `SENSe` commands), and when the triggering configuration is changed (`TRIGger` commands).
- While a scan is running, the instrument automatically stores the minimum and maximum readings and calculates the average for each channel. You can read these values at any time, even during a scan.
- Each reading is stored with measurement units, time stamp, channel number, and alarm status information. From the remote interface, you can specify which information you want returned with the readings. See "Reading Format" on page 184 for more information.
- Readings acquired during a Monitor are *not* stored in memory (however, all readings from a scan in progress at the same time are stored in memory).
- The `INITiate` command stores readings in memory. Use the `FETCh?` command to retrieve stored readings from memory (the readings are not erased when you read them).

Remote Interface Operation: The following command retrieves stored readings from memory (the readings are not erased).

```
FETCh?
```

Use the following commands to query the statistics on the readings stored in memory for a specific channel or from the internal DMM. These commands do *not* remove the data from memory.

`CALC:AVER:MIN? (@3005)`	*Minimum reading on channel*
`CALC:AVER:MIN:TIME? (@3005)`	*Time minimum was logged*
`CALC:AVER:MAX? (@3005)`	*Maximum reading on channel*
`CALC:AVER:MAX:TIME? (@3005)`	*Time maximum was logged*
`CALC:AVER:AVER? (@3005)`	*Average of all readings on channel*
`CALC:AVER:COUNT? (@3005)`	*Number of readings taken on channel*
`CALC:AVER:PTPEAK? (@3005)`	*Peak-to-peak (maximum–minimum)*

The following command retrieves the last reading taken on channel 1 on the module in slot 3 during a scan.

```
DATA:LAST? (@3001)
```

The following command clears the contents of statistics memory for the selected channel.

```
CALC:AVER:CLEAR (@3001)
```

Use the following command to determine the total number of readings stored in memory (all channels) from the most recent scan.

```
DATA:POINTS?
```

The following command reads and clears the specified number of readings from memory. This allows you to continue a scan without losing data stored in memory (if memory becomes full, new readings will overwrite the first readings stored). The specified number of readings are cleared from memory, starting with the oldest reading.

```
DATA:REMOVE? 12
```

Monitor Mode

In the Monitor mode, the instrument takes readings as often as it can on a single channel or the internal DMM, even during a scan. This feature is useful for troubleshooting your system before a test or for watching an important signal.

- Any channel that can be “read” by the instrument can be monitored. This includes any combination of temperature, voltage, resistance, current, frequency, or period measurements on multiplexer channels. You can also monitor a digital input channel or the totalizer count on the digital modules. You can also monitor measurements on the internal DMM, independent of any channel measurements.
- Readings acquired during a Monitor are *not* stored in memory but they are displayed on the front panel; however, all readings from a scan in progress at the same time are stored in memory.
- The Monitor mode is equivalent to making continuous measurements on a single channel or the internal DMM with an infinite scan count. Only one channel can be monitored at a time but you can change the channel being monitored at any time.
- A scan in progress always has priority over the Monitor function.
- Channels do *not* have to be part of an active scan list to be monitored; however, the channel must be configured for a measurement in order to be monitored.
- The Monitor mode ignores all trigger settings and takes continuous readings on the selected channel using the IMMediate (continuous) source.
- The Monitor mode is automatically enabled on all channels that are part of the active scan list. If you define the scan list after monitoring has already been enabled, any channels that are not part of the active scan list will be ignored during the monitor operation (no error is generated).
- Mx+B scaling and alarm limits are applied to the selected channel during a Monitor and all alarm data is stored in the alarm queue (which will be cleared if power fails).
- You can monitor a digital input channel or totalizer channel even if the channel is not part of the scan list (the internal DMM is not required either). The count on a totalizer channel is not reset when it is being monitored (the Monitor ignores the totalizer reset mode).
- If a channel that is currently being monitored is manually closed or opened, the Monitor operation will be disabled on that channel.

Front Panel Operation: DMM or Channel (Measure)

For channel monitoring, turn the knob to the desired channel. To stop a Monitor, press the lighted key again.

Remote Interface Operation: Use the following command to select between the channel Monitor mode (default) and the internal DMM monitor mode.

```
ROUTe:MONitor:MODE {CHANnel|DMM}
```

The following program segment selects the channel to be monitored (specify only one channel) and enables the Monitor function.

```
ROUTE:MON:CHAN (@1003)
ROUTE:MON:CHAN:ENABLE ON,(@1003)
ROUTE:MON:STATE ON
```

The following program segment enables the Monitor function on the internal DMM:

```
ROUTE:MON:MODE DMM
ROUTE:MON:STATE ON
```

To read the monitor data from the selected channel or the internal DMM, send the following command. Each reading is returned with measurement units, time stamp, channel number, and alarm status information (see "Reading Format" on page 184).

```
ROUTe:MONitor:DATA?
```

Scanning With External Instruments

If your application doesn't require the built-in measurement capabilities of the 34980A, you can order the mainframe without the internal DMM. In this configuration, you can use the system for signal routing or control applications. If you install a multiplexer plug-in module in the mainframe, you can use the system for scanning with an external instrument. You can connect an external instrument such as a DMM to the multiplexer's COM terminals (see below) or you can connect to the 34980A's analog buses.

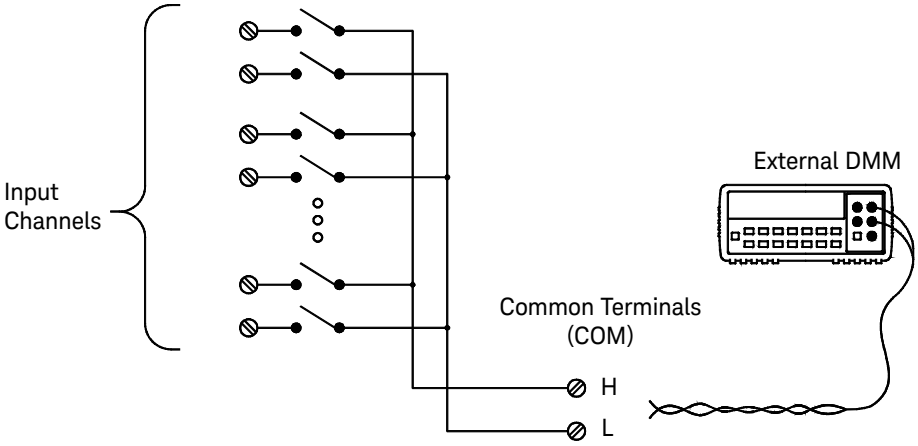

The figure on the following page shows the external connections required to synchronize the scan sequence between the 34980A and an external instrument. The 34980A must notify the external instrument when a relay is closed and fully settled (including channel delay). The 34980A outputs a *Channel Closed* pulse from pin 5 on the rear-panel *Ext Trig* connector. In response, the external instrument must notify the 34980A when it has finished its measurement and is ready to advance to the next channel in the scan list. The 34980A accepts a *Channel Advance* pulse on the *Chan Adv* input line (pin 6).

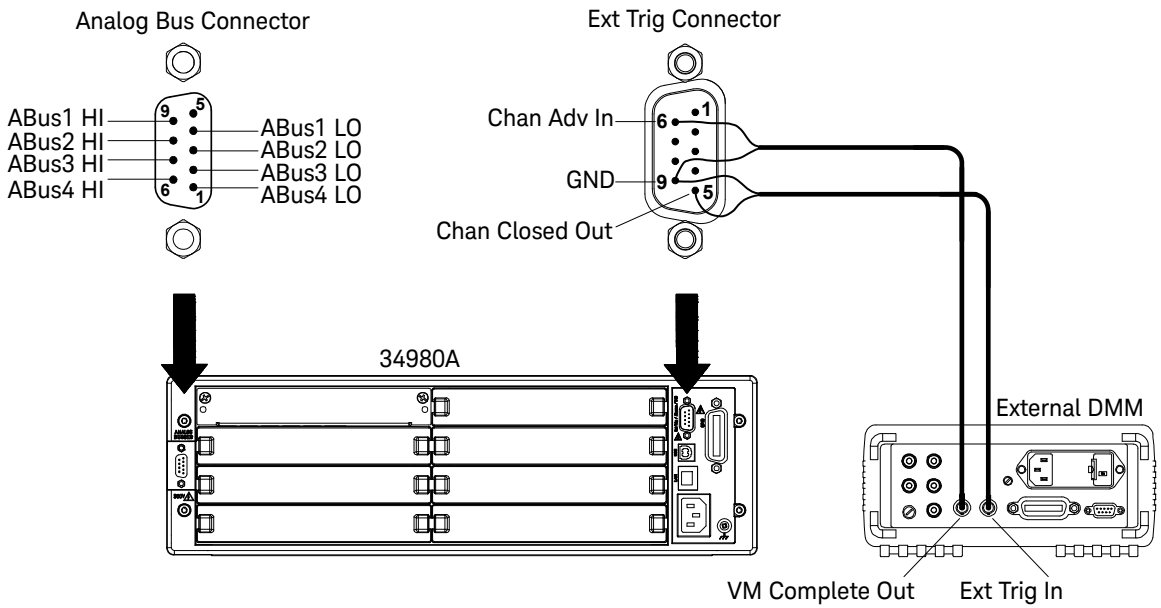

– For an externally-controlled scan, you must either remove the internal DMM from the 34980A or disable it (see "Internal DMM Disable" on page 219). Since the 34980A's internal DMM is not used, readings from multiplexer channels are stored in the external DMM's memory.

– In this configuration, you must set up a *scan list* to include all desired multiplexer or digital channels. Channels which are not in the list are skipped during the scan. By default, the instrument scans the list of channels in ascending order from slot 1 through slot 8 (channels are reordered as needed).

– You can configure the event or action that controls the onset of each sweep through the scan list (a *sweep* is one pass through the scan list). The selected source is used for all channels in the scan list. For more information, refer to "Scan Trigger Source" on page 172.

– You can configure the event or action that notifies the 34980A to advance to the next channel in the scan list. Note that the *Channel Advance* source shares the same sources as the scan trigger. However, an error is generated if you attempt to set the channel advance source to the same source (other than IMMediate) used for the scan trigger.

- You can specify the number of times the instrument will sweep through the scan list. When the specified number of sweeps have occurred, the scan stops. For more information, refer to "Sweep Count" on page 178.
- An externally-controlled scan can also include a read of a digital port or a read of the totalizer count on the digital modules. When the channel advance reaches the first digital channel, the instrument scans through all of the digital channels in that slot (only one channel advance signal is required).
- You can configure the list of channels for 4-wire external scanning without the internal DMM. When enabled, the instrument automatically pairs channel *n* in Bank 1 with channel ***n+20*** in Bank 2 (34921A, 34923A, 34925A) or *n+35* (34922A, 34924A) to provide the source and sense connections. For example, make the source connections to the HI and LO terminals on channel 2 in Bank 1 and the sense connections to the HI and LO terminals on channel 22 (or 37) in Bank 2.

Front Panel Operation: To select the channel advance source, choose the following items.

Scan (Configure) > ADVANCE CHANNEL > AUTO|EXT|MANUAL

To initiate the scan and store all readings in memory, press the **Scan (Measure)** key.

To configure the instrument for 4-wire external scanning, choose the following menu item.

Channel (Configure) > FOUR WIRE > OFF|ON

Remote Interface Operation: The following program segment configures the instrument for an externally-controlled scan.

```
INST:DMM OFF                  Disable internal DMM
ROUT:SCAN (@1001:1020)        Configure scan list
TRIG:SOUR IMM                 Set trigger source
TRIG:COUN 5                   Set trigger count
ROUT:CHAN:ADV:SOUR EXT        Set channel advance source
INIT                          Initiate the scan
```

To configure the instrument for 4-wire external scanning, send the following command.

```
ROUTe:CHANnel:FWIRe {OFF|ON}, (@<ch_list>)
```

Alarm Limits

The instrument has four alarms which you can configure to alert you when a reading exceeds specified limits on a channel during a scan. You can assign a high limit, a low limit, or both to any configured channel in the scan list. You can assign multiple channels to any of the four available alarms (numbered 1 through 4). For example, you can configure the instrument to generate an alarm on the Alarm 1 output when a limit is exceeded on any of channels 1003, 2025, or 3020.

You can also assign alarms to channels on the modules with digital I/O capabilities (34950A and 34952A). For example, you can generate an alarm when a specific bit pattern or bit pattern change is detected on a digital input channel or when a specific count is reached on a totalizer channel. With the digital modules, the channels *do not* have to be part of the scan list to generate an alarm. For complete details, see "Using Alarms With the Digital Modules" on page 201.

Alarm data can be stored in one of two locations depending on whether a scan is running when the alarm occurs.

1 If an alarm event occurs on a channel as it is being scanned, then that channel's alarm status is stored in reading memory as the readings are taken. Each reading that is outside the specified alarm limits is logged in memory. You can store at least 500,000 readings in memory during a scan. You can read the contents of reading memory at any time, even during a scan. Reading memory is *not* cleared when you read it.

2 As alarm events are generated, they are also logged in an alarm queue, which is separate from reading memory. This is the only place where non-scanned alarms get logged (alarms during a monitor, alarms generated by the digital modules, etc.). Up to 20 alarms can be logged in the alarm queue. If more than 20 alarm events are generated, they will be lost (only the first 20 alarms are saved). Even if the alarm queue is full, the alarm status is still stored in reading memory during a scan. The alarm queue is cleared by the `*CLS` (clear status) command, when power is cycled, and by reading all of the entries. A Factory Reset (`*RST` command) *does not* clear the alarm queue.

– You can assign an alarm to any configured channel and multiple channels can be assigned to the same alarm number. However, you cannot assign alarms on a specific channel to more than one alarm number.

- When an alarm occurs, the instrument stores relevant information about the alarm in the queue. This includes the reading that caused the alarm, the time of day and date of the alarm, and the channel number on which the alarm occurred. The information stored in the alarm queue is always in absolute time format and is not affected by the `FORMat:READing:TIME:TYPE` command setting.
- You must configure the channel (function, transducer type, etc.) before setting any alarm limits. If you change the measurement configuration, alarms are turned off and the limit values are cleared. Alarms are also turned off when you change the temperature probe type, temperature units, or disable the internal DMM.
- If you plan to use alarms on a channel which will also use Mx+B scaling, *be sure to configure the scaling values first*. If you attempt to assign the alarm limits first, the instrument will turn off alarms and clear the limit values when you enable scaling on that channel. If you specify a custom measurement label with scaling, it is automatically used when alarms are logged on that channel.
- If you redefine the scan list, alarms are no longer evaluated on those channels (during a scan) but the limit values are not cleared. If you decide to add a channel back to the scan list (without changing the function), the original limit values are restored and alarms are turned back on. This makes it easy to temporarily remove a channel from the scan list without entering the alarm values again.
- Each time you start a new scan, the instrument clears all readings (including alarm data) stored in reading memory from the previous scan. Therefore, the contents of reading memory are always from the most recent scan.
- As shown below, alarms are logged in the alarm queue only when a reading crosses a limit, not while it remains outside the limit and not when it returns to within limits.

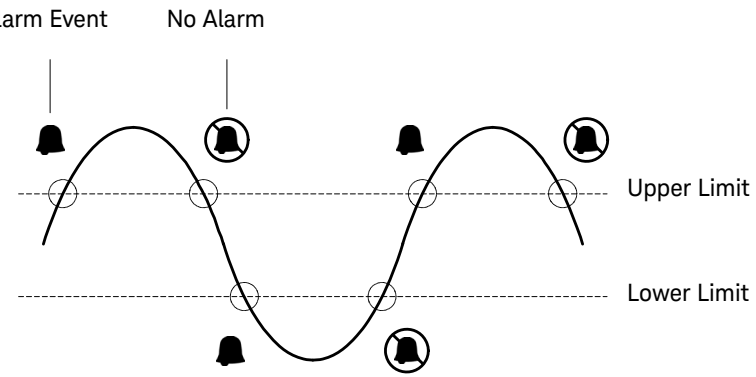

- Four TTL alarm outputs are available on the rear-panel *Alarms* connector. You can use these hardware outputs to trigger external alarm lights, sirens, or send a TTL pulse to your control system. You can also initiate a scan sweep (no external wiring required) when an alarm event is logged on a channel. For complete details, refer to "Using the Alarm Output Lines" on page 199.
- The following table shows the different combinations of front-panel annunciators that may appear while using alarms. In addition to being stored in reading memory, alarms are also recorded in their own SCPI status system. You can configure the instrument to use the status system to generate a Service Request (SRQ) when alarms are generated. Refer to the Keysight 34980A *Programmer's Reference* Help file for more information on the Status System.

🔔	An alarm is enabled on the displayed channel.
H 2	The indicated HI or LO limit is being configured on the indicated alarm (shown while in the *Alarm* menu).
ALARM H 2	An alarm has occurred on one or more channels. The behavior of the Alarm Output lines tracks the alarm annunciators on the front panel.
ALARM	The Alarm Output lines have been cleared but alarms remain in the queue.

- The default values for the upper and lower alarm limits are “0”.
  The lower limit must always be less than or equal to the upper limit, even if you are using only one of the limits.
- For details on configuring alarms on the digital modules, see “Using Alarms With the Digital Modules” on page 201.
- A Factory Reset (`*RST` command) clears all alarm limits and turns off all alarms. An Instrument Preset (`SYSTem:PRESet` command) or Card Reset (`SYSTem:CPON` command) does not clear the alarm limits and does not turn off alarms.

Front Panel Operation: Alarm > LOW LIMIT > HIGH LIMIT > THIS CHANNEL ALARM

After selecting the lower and upper limit for the selected channel, assign one of the four alarm numbers. Note that the instrument does not start evaluating the alarm conditions until you exit the *Alarm* menu.

Remote Interface Operation: To assign the alarm number to report any alarm conditions on the specified channels, use the following command (if not assigned, all alarms on all channels are reported on Alarm 1 by default).

```
OUTPUT:ALARM2:SOURCE (@2001,2012)
```

To set the upper and lower alarm limits on the specified channels, use the following commands.

```
CALC:LIMIT:UPPER 5.25,(@2001,2012)
CALC:LIMIT:LOWER 0.025,(@2001,2012)
```

To enable the upper and lower alarm limits on the specified channels, use the following commands.

```
CALC:LIMIT:UPPER:STATE ON,(@2001,2012)
CALC:LIMIT:LOWER:STATE ON,(@2001,2012)
```

Viewing Stored Alarm Data

If an alarm occurs on a channel as it is being scanned, that channel's alarm status is stored in reading memory as the readings are taken, and in a separate alarm queue. The alarm queue the only place where non-scanned alarms (e.g. alarms during a monitor, alarms generated by the digital modules) get logged.

- You can store at least 500,000 readings in memory during a scan. You can read the contents of reading memory at any time, even during a scan. Reading memory is *not* cleared when you read it.
- Each time you start a new scan, the instrument clears all readings (including alarm data) stored in reading memory from the previous scan.
- Up to 20 alarms can be logged in the alarm queue. If more than 20 alarm events are generated, only the first 20 alarms are saved.
- The alarm queue is cleared only by the `*CLS` (clear status) command, when power is cycled, or by reading all alarm entries.

Front Panel Operation: View > ALARMS

From the front panel, you can view the first 20 alarms in the queue. After turning the knob to the desired channel, press the left or right arrow keys to view the alarm reading. The alarm queue is cleared when you read the alarms. The annunciators indicate which alarm is being viewed.

Remote Interface Operation: The following command reads data from the alarm queue (one alarm event is read and cleared each time this command is executed).

```
SYSTEM:ALARM?
```

The following is an example of an alarm stored in the alarm queue (if no alarm data is in the queue, the command returns "0" for each field).

```
2.61950000E+01   C,2004,11,21,15,30,23.000,1003,2
```

1 2 3 4 5

1	Reading with Units (26.195 °C)	**4**	Channel Number
2	Date (November 21, 2004)	**5**	Alarm Limit Threshold Crossed (0 = No Alarm, 1 = LO, 2 = HI)
3	Time (3:30:23.000 PM)		

The following command retrieves scanned readings and alarm data from reading memory (the readings are not erased).

```
FETCH?
```

Using the Alarm Output Lines

Four TTL alarm outputs are available on the rear-panel *Alarms* connector. You can use these hardware outputs to trigger external alarm lights, sirens, or send a TTL pulse to your control system. You can assign an alarm to any configured channel and multiple channels can be assigned to the same alarm number. Each alarm output line represents the logical “OR” of all channels assigned to that alarm number (an alarm on any of the associated channels will pulse the line).

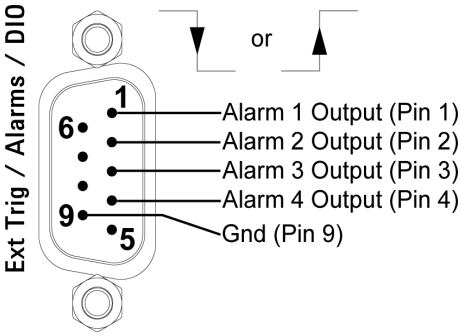

Alarms connector (as viewed from rear of instrument)

You can configure the behavior of the alarm output lines as described below. The behavior of the alarm annunciators on the front panel also tracks the alarm output configuration. The configuration that you select is used for all four alarm output lines. A Factory Reset (`*RST` command) clears all four alarm outputs but does not clear the alarm queue in either configuration.

- *Latch Mode*: In this mode, the corresponding output line is latched true when the first alarm occurs and remains asserted until you clear it by initiating a new scan or cycling power. You can manually clear the output lines at any time (even during a scan) and the alarm data in memory is *not* cleared (however, data is cleared when you initiate a new scan).
- *Track Mode*: In this mode, the corresponding output line is asserted only when a reading crosses a limit and remains outside the limit. When a reading returns to within limits, the output line is automatically cleared. You can manually clear the output lines at any time (even during a scan) and the alarm data in memory is *not* cleared (however, data is cleared when you initiate a new scan). The alarm outputs are also cleared when you initiate a new scan.
- You can control the slope of the pulse from the alarm outputs (the selected configuration is used for all four outputs). In the falling edge mode, 0V (TTL low) indicates an alarm. In the rising edge mode, +5V (TTL high) indicates an alarm. A Factory Reset (`*RST` command) will reset the slope to falling edge.

  ***Note*:** Changing the slope of the output lines may cause the lines to change state.

Front Panel Operation:

- To manually clear all four alarm output lines, select:

  Alarm > CLEAR ALARM OUT? > YES|NO
- To select the output configuration for all four output lines, select:

  Alarm > ALARM OUT SIGNAL > TRACK|LATCH
- To configure the slope of all four output lines, select:

  Alarm > ALARM OUT SLOPE > NEGATIVE|POSITIVE

Remote Interface Operation: To clear the specified output lines (or to clear all four lines), use one of the following commands.

`OUTPUT:ALARM2:CLEAR`	*Clear alarm output line 2*
`OUTPUT:ALARM:CLEAR:ALL`	*Clear all four alarm outputs*

To select the output configuration for all four output lines, use the following command.

```
OUTPut:ALARm:MODE {LATCh|TRACk}
```

To configure the slope of all four output lines, use the following command.

```
OUTPut:ALARm:SLOPe {NEGative|POSitive}
```

Using Alarms With the Digital Modules

You can configure the instrument to generate an alarm when a specific bit pattern or bit pattern change is detected on a digital input channel or when a specific count is reached on a totalizer channel (34950A and 34952A). These channels *do not* have to be part of the scan list to generate an alarm. Alarms are evaluated continuously as soon as you enable them.

– The channel numbering scheme for the digital input and totalizer channels is shown below (*s* represents the slot number).

	Digital Input Channel Numbering	Totalizer Channel Numbering
34950A	*s*101 through *s*104 *s*201 through *s*204	*s*301, *s*302
34952A	*s*001 through *s*004	*s*005

– Pattern comparisons always start on the lowest-numbered channel in the bank and extend to all channels involved in the channel width.

– Alarms are evaluated continuously on the digital modules, but alarm data is stored in reading memory only during a scan.

– Each time you start a new scan, the instrument clears all readings (including alarm data) stored in reading memory from the previous scan. However, alarm data stored in the alarm queue from the digital modules is not cleared. Therefore, although the contents of reading memory are always from the most recent scan, the alarm queue may contain data that occurred during previous scans or while the instrument was not scanning.

Front Panel Operation:

– To configure an alarm on a digital input channel, choose from the following items and then set the desired patterns for the compare data and mask. Set each bit to “0” or “1”.

  Alarm > COMPARE DATA > COMPARE MASK

– You can either specify that an alarm will occur when certain bits change or when a specific pattern is read:

  Alarm > COMPARE FOR > EQUAL|NOT-EQ

– To configure an alarm on a specific totalizer count, select:

  Alarm > TOTALIZER LIMIT

Remote Interface Operation (Digital Input): To assign the alarm number to report any alarm conditions on the specified digital input channels, use the following command.

```
OUTPut:ALARm[1|2|3|4]:SOURce (@<ch_list>)
```

To configure alarms on the specified digital input channel, use the following commands (also see the example on the following page).

```
CALCulate
  :COMPare:TYPE {EQUal|NEQual},(@<ch_list>)
  :COMPare:DATA <data>,(@<ch_list>)
  :COMPare:MASK <mask>,(@<ch_list>)
```

Select `EQUal` to generate an alarm when the data read from the port is equal to `CALC:COMP:DATA` after being masked by `CALC:COMP:MASK`. Select `NEQual` (not equal) to generate an alarm when the data read from the port is not equal to `CALC:COMP:DATA` after being masked by `CALC:COMP:MASK`.

Use `CALC:COMP:MASK` to designate the “don’t care” bits. Bits that you set to “0” in the mask are ignored. To enable the specified alarm mode, send the following command.

```
CALCulate:COMPare:STATe ON,(@<ch_list>)
```

Example: *Configuring an Alarm on a Digital Input*

The following program segment sets the digital pattern for the 34950A in slot 3 and then enables the pattern comparison mode. When the data read from the bank is equal to the comparison pattern, an alarm is generated on Alarm 2.

```
CALC:COMP:DATA:WORD #HF6,(@3101)    Set compare pattern (1111 0110)
CALC:COMP:TYPE EQUAL,(@3101)        Generate alarm on match
OUTP:ALARM2:SOUR (@3101)            Enable alarms
CALC:COMP:STAT ON,(@3101)           Enable pattern compare mode
```

Remote Interface Operation (Totalizer): To assign the alarm number to report any alarm conditions on the specified totalizer channels, use the following command.

```
OUTPut:ALARm[1|2|3|4]:SOURce (@<ch_list>)
```

To configure an alarm on a totalizer channel, specify the desired count as the upper limit using the following command.

```
CALCulate:LIMit:UPPer <count>,(@<ch_list>)
```

To enable the upper limit on the specified totalizer channel, use the following command.

```
CALCulate:LIMit:UPPer:STATe ON,(@<ch_list>)
```

Sequences

This section gives information on defining and executing a *sequence*, which is a compiled series of SCPI commands stored in non-volatile memory and identified by a user-defined name. Sequences can be used in a variety of applications, such as creating a signal path from a device-under-test to a measurement device or sequencing relays in a specified order. You can also uses sequences in conjunction with other operations to configure and synchronize complex measurements without having to send the routing commands each time.

The following tables summarizes the commands used to define, execute, and manage sequences. For more information, see the Keysight 34980A *Programmer's Reference* Help file.

Sequence Definition	
ROUTe:SEQuence:DEFine <*name*>, "<*commands*>"	Defines a sequence.
ROUTe:SEQuence:DEFine? <*name*>	Returns sequence definition.

Sequence Execution	
ROUTe:SEQuence:ABORT	Terminates currently-running sequence.
ROUTe:SEQuence:BUSY?	Returns "1" if sequence is executing (busy).
ROUTe:SEQuence:RUNNing:NAME?	Returns name of currently-running sequence.
ROUTe:SEQuence:TRIGger[:IMMediate]	Executes specified sequence.
ROUTe:SEQuence:WAIT	Blocks until sequence has completed.

Sequence Management	
ROUTe:SEQuence:CATalog?	Returns list of defined sequence names.
ROUTe:SEQuence:DELete:ALL	Deletes all sequences from memory.
ROUTe:SEQuence:DELete[:NAME] <*name*>	Deletes specified sequence from memory.

Alarm Limits	
OUTPut:ALARm{1-4}:SEQuence?	Returns sequence associated with alarm.
ROUTe:SEQuence:TRIGger:SOURce <*name*>, <*source*>	Assigns trigger source to sequence.
ROUTe:SEQuence:TRIGger:SOURce? <*name*>	Returns trigger source currently selected.

Defining a Sequence

A sequence defines a series of SCPI commands with an associated name. When the sequence is first defined, the commands are compiled and then stored in a compressed format in non-volatile memory. The following SCPI commands are allowed in a sequence definition (all other commands will generate an error).

```
ABORt
DISPlay:TEXT '<string>'
OUTPut[:STATe] {OFF|0|ON|1}, (@<ch_list>)
ROUTe:CLOSe (@<ch_list>)
ROUTe:CLOSe:EXCLusive (@<ch_list>)
ROUTe:MODule:WAIT {1-8|SLOT1-SLOT8|ALL}
ROUTe:OPEN (@<ch_list>)
ROUTe:OPEN:ABUS [{1-4|ABUS1-ABUS4|ALL}]
ROUTe:OPEN:ALL [{1-8|SLOT1-SLOT8|ALL}]
ROUTe:SEQuence:TRIGger[:IMMediate] <name>
[SENSe:]TOTalize:CLEar:IMMediate (@<ch_list>)
SOURce:CURRent[:LEVel] {<current>|MIN|MAX|DEF}, (@<ch_list>)
SOURce:DIGital:DATA[:{BYTE|1|WORD|2|LWORd|4}] <data>,(@<ch_list>)
SOURce:DIGital:DATA:BIT {0|1}, <bit>, (@<ch_list>)
SOURce:FUNCtion:TRIGger:IMMediate (@<ch_list>)
SOURce:VOLTage[:LEVel] {<voltage>|MIN|MAX|DEF} , (@<ch_list>)
SYSTem:BEEPer
SYSTem:DELay[:IMMediate] <time>
```

- Sequences can be defined from the remote interface only. You can, however, review, execute, and delete sequences from the front panel.
- When a sequence is defined, the specified commands are checked for proper syntax and absolute parameter range limits. If an error is detected during compilation, the entire sequence will be discarded. During compilation, the sequence commands do not have to be valid for the current instrument configuration; this allows you to define sequences without regard to compatibility with the current set of installed modules. More extensive error checking, such as channel range expansion and validation, is performed when the sequence is executed.
- If you define a sequence with a name already in use by another sequence, the new definition will overwrite the previous definition (no error is generated).
- A sequence name can contain up to 30 characters. The first character must be a letter (A-Z), but the remaining 29 characters can be letters, numbers (0-9), or an underscore (_). Blank spaces are not allowed.
- When stored in memory, the user-defined sequence names are converted to all uppercase letters. For example, when stored “MySeq_1” is converted to “MYSEQ_1”.
- A sequence may invoke another sequence, but may not invoke itself recursively. In addition, the number of invocations is limited to *four* levels of nesting and this is enforced at the time of execution. Exceeding the limit will abort the sequence and an error will be generated.
- At the time of sequence definition, a sequence may reference another undefined sequence; however, at the time of execution an error will be generated if an undefined sequence is invoked.
- Up to 500 unique sequences can be stored in non-volatile memory. Each sequence is limited to 1024 bytes.
- While a scan is running (see “Scanning” on page 167), the instrument prevents use of all channels in banks that contain one or more channels in the specified scan list (these channels are dedicated to the scan). Therefore, if a sequence attempts to operate a channel in a scanned bank, an error is generated and the entire sequence will be discarded.
- If the command overlap function is enabled, all switching operations within the sequence follow the overlapping rules. If the command overlap function is disabled, all commands within the sequence are processed in a serial fashion in the exact order in which they are received. Note, however, that within a single command containing a <ch_list> parameter (e.g., `ROUT:CLOSE`

`(@1001:1010)`), the order of the individual switch operations is not guaranteed.

Remote Interface Operation: The following command defines a sequence named “MYSEQ_1”, which closes several channels on the module in slot 1 and opens a single channel on the module in slot 2.

```
ROUT:SEQ:DEF MYSEQ_1,"ROUT:CLOS (@1001:1009);OPEN (@2001)"
```

Querying the Sequence Definition

Once you have defined a sequence, you can query the definition to review what SCPI commands have been assigned. Although sequences can be defined from the remote interface only, you can review them from the front panel.

- The exact text specified in the original sequence definition is not preserved when the sequence is compressed/stored in memory. Therefore, the string returned may not be identical to the original string, but it will be functionally equivalent. If the specified sequence name is not currently stored in memory, an error is generated.
- The query command always returns the short form of the command header in all upper-case letters (e.g., “ROUT:CLOS” is returned instead of “ROUTE:CLOSE”). Channel numbers and channel range specifiers are returned as they were specified.

Front Panel Operation: **Sequence > VIEW**

Remote Interface Operation: The following command returns a string containing the SCPI commands assigned to the specified sequence.

```
ROUT:SEQ:DEF? MYSEQ_1
```

The above command returns a string in the form (the quotes are also returned):

```
":ROUT:CLOS (@1001:1009);:ROUT:OPEN (@2001)"
```

Executing a Sequence

After you have defined a valid sequence, you can execute it to process the specified commands. If the specified sequence name is not currently stored in memory, an error will be generated.

- If you attempt to trigger a sequence while one is already executing, the trigger will be placed in a queue. When the trigger queue is full, a “trigger ignored” error will be generated.
- To abort a sequence execution from the remote interface, use the `ROUTe:SEQuence:ABORt` command or a `Device Clear`. When the sequence is terminated, the resultant instrument state will be determined by how of the sequence had been executed when the `ABORt/Device Clear` was received. An `ABORt` command (system abort) executed from within a sequence will not terminate the sequence. The `*RST` and `SYSTem:PRESet` commands will also abort a sequence execution prior to performing their own actions.
- When a sequence is defined, the specified commands are checked for proper syntax and absolute parameter range limits. If an error is detected during compilation, the entire sequence will be discarded. More extensive error checking, such as channel range expansion and validation, is performed when the sequence is executed.
- A sequence may invoke another sequence, but may not invoke itself recursively. In addition, the number of invocations is limited to *four* levels of nesting and this is enforced at the time of execution. Exceeding the limit will abort the sequence and an error will be generated.
- You can also execute a sequence when an alarm condition is reached. See “Executing a Sequence on an Alarm Condition” on page 209 for more information.
- While a scan is running (see “Scanning” on page 167), the instrument prevents use of all channels in banks that contain one or more channels in the specified scan list (these channels are dedicated to the scan). Therefore, if a sequence attempts to operate a channel in a scanned bank, an error is generated and the entire sequence will be discarded.

Front Panel Operation: Sequence > EXECUTE

Although sequences can be defined from the remote interface only, you can execute pre-defined sequences from the front panel.

Remote Interface Operation: The following command executes a sequence named “MYSEQ_1”, which closes several channels on the module in slot 1 and opens a single channel on the module in slot 2.

```
ROUT:SEQ:DEF MYSEQ_1,"ROUT:CLOS (@1001:1009);OPEN (@2001)"
ROUT:SEQ:TRIG MYSEQ_1
```

Executing a Sequence on an Alarm Condition

After you have defined a valid sequence, you can configure the instrument to execute a sequence when a reading crosses an alarm limit on a channel. The specified sequence will execute *once* when an alarm occurs on the specified alarm. If the specified sequence name is not currently stored in memory, an error will be generated.

For more information on configuring alarms, see "Alarm Limits" on page 194.

- Assigning a sequence to an alarm will remove any other sequence's association with that alarm, as well as that alarm's association to any other sequence.
- You can assign multiple channels to any of the four available alarms (numbered 1 through 4). For example, you can configure the instrument to generate an alarm on the Alarm 1 output when a limit is exceeded on any of channels 1003, 2005, or 3010. You cannot, however, assign alarms on a specific channel to more than one alarm number.
- The sequence will execute once when an alarm occurs, after which the trigger source will be automatically set to MANual. The sequence will not execute again until the trigger source has been reassigned, the alarm has been cleared, the association of the sequence to the alarm has been re-established, and the alarm condition exists again.

Front Panel Operation: Sequence > TRIGGER > MANUAL|ALARM1–ALARM4

Select MANUAL to remove an association without reassigning it to another alarm.

Remote Interface Operation: To assign the sequence to a specific alarm number, use the following command. Specify the `MANual` parameter to remove an association without reassigning it to another alarm.

```
ROUTe:SEQuence:TRIGger:SOURce <name>,{ALARm1-ALARm4|MANual}
```

The following program segment selects the alarm source and configures the instrument to execute the sequence named "MYSEQ_1" when an alarm is reported on Alarm 1. The Monitor mode is used to evaluate alarm conditions on the selected channel.

```
ROUT:SEQ:DEF MYSEQ_1,"ROUT:CLOS (@1001:1009);OPEN (@2001)"
CALC:LIM:UPP 10.25,(@1003)
CALC:LIM:UPP:STAT ON,(@1003)
OUTP:ALARM1:SOUR (@1003)
```

```
ROUT:MON:CHAN (@1003)
ROUT:MON:CHAN:ENAB ON, (@1003)
ROUT:SEQ:TRIG:SOUR MYSEQ_1,ALAR1
ROUT:MON:STAT ON
INIT
```

Deleting Sequences

You can delete sequences from the front panel or over the remote interface. Deleting a sequence also frees up space in non-volatile memory previously allocated for the sequence.

- If you attempt to delete a sequence name that is not currently stored in memory, an error will be generated.
- If you attempt to delete a sequence while it is executing, an error will be generated. To abort a sequence execution, use the `ROUTe:SEQuence:ABORt` command or a `Device Clear`.
- Deleting a sequence will remove its association with an alarm if used (see "Executing a Sequence on an Alarm Condition" on page 209 for more information).

Front Panel Operation: Sequence > DELETE|DELETE ALL

Remote Interface Operation: The following command deletes the sequence named "MYSEQ_1".

```
ROUT:SEQ:DEL MYSEQ_1
```

The following command deletes all sequences from memory.

```
ROUT:SEQ:DEL:ALL
```

Reading the List of Stored Sequences

From the remote interface only, you can read the names of all sequences currently stored in memory.

- When stored in memory, the user-defined sequence names are converted to all uppercase letters. For example, when stored "MySeq_1" is converted to "MYSEQ_1".
- Up to 500 unique sequences can be stored in non-volatile memory. Each sequence is limited to 1024 bytes.

Remote Interface Operation: The following command returns a comma-separated list of sequence names currently stored.

```
ROUT:SEQ:CAT?
```

The above command returns a string in the form:

```
MYSEQ_1,PATH_DUT1,SW_PATH2
```

If no sequence names have been stored, a null string (“”) string is returned.

System-Related Operations

This section gives information on system-related topics such as instrument state storage, error conditions, self-test, and front-panel display control. This information is not directly related to making measurements but is an important part of operating the instrument.

Firmware Revision

The mainframe, the internal DMM, and each of the plug-in modules has its own microprocessor. You can query each to determine which version of firmware is installed. For the mainframe, three firmware revision numbers are returned: mainframe revision, boot code revision, and front-panel revision. For the internal DMM and all plug-in modules, one firmware revision number is returned.

Front Panel Operation: Utility > FIRMWARE > REVISIONS

Use the knob to scroll through the revision numbers for the mainframe, internal DMM, and each installed module.

Remote Interface Operation: Use the following command to read the mainframe firmware revision numbers (be sure to dimension a string variable with at least 72 characters).

```
*IDN?
```

The above command returns a string in the form:

Keysight TECHNOLOGIES,34980A,<Serial Number>,m.mm–b.bb–f.ff–d.dd

m.mm	=	Mainframe revision number
b.bb	=	Boot code revision number
f.ff	=	Front-panel revision number
d.dd	=	Internal DMM revision number

Use the following command to read the firmware revision number of the module in the specified slot (be sure to dimension a string variable with at least 73 characters).

```
SYSTem:CTYPe? <slot>
```

This command returns a string in the form:

Keysight TECHNOLOGIES,<Model Number>,<Serial Number>,<Firmware Rev>

A 10-digit string is returned for the Serial Number field. The Firmware Revision has the form **R.RR** and indicates the revision of firmware currently in use on the specified module.

Product Firmware Updates

As new product features and enhancements become available, you can easily update your mainframe and plug-in module firmware to ensure optimum compatibility. The latest firmware updates are available from the Keysight 34980A product page at www.keysight.com/find/34980AUpdates.

Front Panel Operation: Utility > FIRMWARE > UPDATE

Once you have downloaded the latest mainframe firmware (see above), use the knob to scroll through the installed modules that require a firmware update. To exit the menu without installing the updates, select CANCEL.

Instrument State Storage

The instrument has five storage locations in non-volatile memory to store instrument states, numbered 1 through 5. You can assign a user-defined name to each of locations 1 through 5.

- You can store the instrument state in any of the five locations, but you can only recall a state from a location that contains a previously stored state.
- The instrument stores the state of all plug-in modules including all channel configurations, scanning setups, and Mx+B scaling values. However, note that only the measurement attributes of the currently-selected function (range, resolution, etc.) will be preserved in the stored states.
- Before recalling a stored state, the instrument verifies that the same plug-in module types are installed in each slot. If a different module type is installed, the instrument will perform the equivalent of a Factory Reset (`*RST` command) and an error will be generated.
- When shipped from the factory, storage locations 1 through 5 are empty. In addition, the automatic recall mode is disabled (`MEMory:STATe:RECall:AUTO OFF` command) and a Factory Reset (`*RST` command) is issued when power is turned on.

- You can name a location from the front panel or over the remote interface but you can recall a named state *only* from the front panel. The name can contain up to 12 characters. The first character *must* be a letter (A-Z), but the remaining 11 characters can be letters, numbers (0-9), or the underscore character ("_"). Blank spaces are not allowed. An error is generated if you specify a name with more than 12 characters.
- A Factory Reset (`*RST` command) does not affect the configurations stored in memory. Once a state is stored, it remains until it is overwritten or specifically deleted.

Front Panel Operation: Store/Recall > STORE|RECALL|DELETE|RENAME|AUTO

To rename a location, select RENAME. Press the arrow keys to move the cursor to a specific position and then turn the knob to select the desired letter or number. To clear the name of a location, change each character to "^" (starting with the rightmost character) and then press the left arrow key to move to the next character.

To automatically recall a specific location when power is restored, select AUTO. Use the knob to scroll through the available locations containing a stored state.

CAUTION **For proper instrument function, Channel monitor must be turn OFF when the state is stored and Auto recall is enabled. If the Channel monitor is turned ON, the front panel may freeze. If the front panel is frozen, all plug-in modules must be removed and the auto-recall function turned OFF to restore the instrument back to its initial working state.**

Remote Interface Operation: Use the following commands to store and recall instrument states.

```
*SAV {1|2|3|4|5}
*RCL {1|2|3|4|5}
```

To assign a user-defined name to a stored state to be recalled from the front panel, see the following example. From the remote interface, you can only recall a stored state using a number (1 through 5).

```
MEM:STAT:NAME 1,TEST_RACK_1
```

To configure the instrument to automatically recall location 2 when power is restored, send the following commands.

```
*SAV 2
MEM:STATE:RECALL:SELECT 2
MEM:STATE:RECALL:AUTO ON
```

Error Conditions

When the front panel ERROR annunciator turns on, one or more command syntax or hardware errors have been detected. A record of up to 20 errors can be stored in the instrument's *error queue*. Each remote interface I/O session (i.e., GPIB, USB, LAN, etc.) has its own interface-specific error queue. Errors appear in the error queue of the I/O session that caused the error (the front panel reports errors from all I/O sessions).

For a complete listing of the error messages, see the Keysight 34980A *Service Guide*.

- The instrument beeps once each time a command syntax or hardware error is generated.
- A special *global* error queue holds all power-on and hardware-related errors (e.g., over-temperature, Safety Interlock, etc.).
- Errors are retrieved in first-in-first-out (FIFO) order. The first error returned is the first error that was stored. Errors are cleared as you read them. Once you have read all of the interface-specific errors, the errors in the global queue are retrieved.
- Errors are cleared as you read them. When you have read all errors from the interface-specific and global error queues, the ERROR annunciator turns off and the errors are cleared.
- If more than 20 errors have occurred, the last error stored in the queue (the most recent error) is replaced with -350,"Error queue overflow". No additional errors are stored until you remove errors from the queue. If no errors have occurred when you read the error queue, the instrument responds with +0,"No error".
- The front panel reports errors from all I/O sessions as well as the global error queue.
- The interface-specific and global error queues are cleared by the `*CLS` (Clear Status) command and when power is cycled. The errors are also cleared when you read the error queue. The error queue is not cleared by a Factory Reset (`*RST` command) or an Instrument Preset (`SYSTem:PRESet` command).

Front Panel Operation: View > ERROR QUEUE

Use the knob to scroll through the errors. Press the right arrow key to view the text of the error message. All errors are cleared when you exit the menu.

Remote Interface Operation: The following command reads and clears one error from the queue.

```
SYSTem:ERRor?
```

Self-Test

A *power-on* self-test occurs automatically when you turn on the instrument. This limited test assures you that the instrument and all installed plug-in modules are operational. This self-test does *not* perform the extensive self test described below.

A *complete* self-test actually performs a series of internal tests and takes approximately 20 seconds to execute. If all tests pass, you can have high confidence that the instrument and all installed plug-in modules are operational. *This feature is available from the remote interface only.*

- If you have a 34951A Isolated DAC Module installed, the complete self-test will require an additional 15 seconds to complete per DAC module (a memory test is performed).
- The complete self-test will abort if any signals are connected to ABus1 via the rear-panel Analog Bus connector (pins 4, 5, and 9; see "Analog Buses" on page 139). Be sure to disconnect any signals from ABus1 prior to running the self-test.
- If the power-on or complete self-test fails, and error is stored in the error queue. See the Keysight 34980A *Service Guide* for more information on returning the instrument to Keysight for service.
- Following the complete self-test, the instrument issues a Factory Reset (`*RST` command).

Remote Interface Operation: The following command returns "+0" if the self-test is successful or "+1" if it fails.

```
*TST?
```

Front-Panel Display Control

For security reasons or for a slight increase in measurement rates, you may want to turn off the front-panel display. From the remote interface, you can also display up to 18 characters on the upper line of the front-panel display.

- You can disable the front-panel display only by sending a command from the remote interface (i.e., you cannot disable the front panel while in local operation).
- When disabled, the entire front-panel display goes dark and all display annunciators except ERROR, HOT, and Safety Interlock are disabled.
- The front-panel display is automatically enabled when power is cycled, after a Factory Reset (`*RST` command), or after an Instrument Preset (`SYSTem:PRESet` command).
- You can display a message on the front panel by sending a command from the remote interface. The instrument can display up to 18 characters on the upper line of the front-panel display; any additional characters are truncated (no error is generated). You can use letters (A-Z), numbers (0-9), and special characters like “@”, “%”, “*”, etc.
  Use the “#” character to display a degree symbol (°). Commas, periods, and semicolons share a display space with the preceding character, and are not considered individual characters.
- While a message is displayed on the front panel, readings from a scan or monitor are not sent to the front-panel display.
- Sending a text message to the display overrides the display state; this means that you can display a message even if the display is turned off. In addition, pressing any front-panel key will clear the text message.

Remote Interface Operation: The following command turns off the front-panel display.

```
DISPLAY OFF
```

The following command displays a message on the front panel and turns on the display if currently disabled (the quotes are not displayed).

```
DISPLAY:TEXT "SCANNING ..."
```

To clear the message displayed on the front panel (without changing the display state), send the following command.

```
DISPLAY:TEXT:CLEAR
```

Front-Panel Number Format

The instrument can show numbers on the front-panel display with periods or commas for the decimal point (radix) and thousands separator.

This feature is available from the front panel only.

- The number format is stored in non-volatile memory, and does *not* change when power has been off, after a Factory Reset (`*RST` command), or after an Instrument Preset (`SYSTem:PRESet` command).
- When shipped from the factory, a period is used as the radix character and commas are used for the digits separator (e.g., +1.234,56 VDC).

Front Panel Operation: Utility > MISC. SETTINGS > RADIX|THOUSAND SEPARATOR

Real-Time System Clock

During a scan, the instrument stores all readings and alarms with the current time and date (based on a 24-hour clock).

- When shipped from the factory, the instrument is set to the current time and date for Greenwich Mean Time (GMT).
- After mainframe power has been cycled, the time is truncated downward to the nearest second (no rounding occurs). If a real-time accuracy of greater than 1 second is required, you must send the `SYSTem:TIME` command each time the mainframe is powered on.
- The clock setting is stored in non-volatile memory, and does not change when power has been off, after a Factory Reset (`*RST` command), or after an Instrument Preset (`SYSTem:PRESet` command).

Front Panel Operation: Utility > DATE/TIME

Remote Interface Operation: The following commands show how to set the time and date.

`SYST:TIME 15,30,23.000`	*Set time to 3:30:23.000 PM*
`SYST:DATE 2004,11,24`	*Set date to November 21, 2004*

Internal DMM Disable

You can scan through the configured channels using either the internal DMM (an optional accessory with the 34980A) or an external instrument. For externally-controlled scans, you must either disable the internal DMM or remove it from the instrument.

- For information on controlling a scan with an external instrument, refer to "Scanning With External Instruments" on page 191.
- With the internal DMM disabled, any command received that is directed to the DMM or requires its use (e.g., configuring a multiplexer channel for a DMM measurement), will generate an error.
- When you change the state of the internal DMM, the instrument issues a Factory Reset (`*RST` command).
- If you ordered the internal DMM, it is enabled when shipped from the factory.
- The internal DMM setting is stored in *volatile* memory and will be enabled (ON) when power is turned off or after a Factory Reset (`*RST` command).

Front Panel Operation: Utility > DMM

Remote Interface Operation: `INSTrument:DMM[:STATe] {OFF|ON}`

Relay Cycle Count

The instrument has a *Relay Maintenance System* to help you predict relay end-of-life. The instrument counts the cycles on each relay in the instrument and stores the total count in non-volatile memory on each relay module. You can use this feature on any of the relay modules and the internal DMM.

- In addition to the channel relays, you can also query the count on the Analog Bus relays and bank relays.
- You can query the state of six relays associated with function selection and isolation on the internal DMM. These relays are numbered K102 through K107.

Remote Interface Operation: To read the count on either the specified internal DMM relay or module channel relays, send the following commands.

```
DIAG:DMM:CYCLES? 2
DIAG:RELAY:CYCLES? (@1003,1013)
```

SCPI Language Version

The instrument complies with the rules and conventions of the present version of SCPI (*Standard Commands for Programmable Instruments*). You can determine the SCPI version with which the instrument is in compliance by sending a command from the remote interface.

- You can query the SCPI version from the remote interface only.
- The SCPI version is returned in the form “YYYY.V”, where “YYYY” represents the year of the version, and “V” represents a version number for that year (for example, 1994.0).

Remote Interface Operation: `SYSTem:VERSion?`

Calibration Overview

This section gives a brief introduction to the calibration features of the instrument and plug-in modules. For a more detailed discussion of the calibration procedures, see the Keysight 34980A *Service Guide*.

Calibration Security

This feature allows you to enter a security code to prevent accidental or unauthorized calibrations of the instrument. The specified code is used to unsecure the mainframe and all installed modules. When you first receive your instrument, it is secured. Before you can calibrate the instrument, you must unsecure it by entering the correct security code.

- The security code is set to “AT34980” when the instrument is shipped from the factory. The security code is stored in non-volatile memory in the mainframe, and does not change when power has been off, after a Factory Reset (`*RST` command), or after an Instrument Preset (`SYSTem:PRESet` command).
- The security code can contain up to 12 characters. The first character must be a letter (A-Z), but the remaining 11 characters can be letters, numbers (0-9), or the underscore character (“_”). Blank spaces are not allowed. You do not have to use all 12 characters but the first character must always be a letter.

To Unsecure the Instrument for Calibration

You can unsecure the instrument from the remote interface only.
The instrument is secured when shipped from the factory.

Remote Interface Operation: To unsecure the instrument, send the following command (the factory security code is shown).

```
CAL:SECURE:STATE OFF,AT34980
```

To Secure the Instrument for Calibration

You can secure the instrument from the remote interface only.
The instrument is secured when shipped from the factory.

Remote Interface Operation: To secure the instrument, send the following command (the factory security code is shown).

```
CAL:SECURE:STATE ON,AT34980
```

To Change the Security Code

To change the security code, you must first unsecure the instrument, and then enter a new code. *You can change the security code from the remote interface only*. Make sure you have read the security code rules described on page 221 before attempting to change the security code.

Remote Interface Operation: To change the security code, unsecure the instrument using the old security code. Then enter the new code as shown below.

`CAL:SECURE:STATE OFF,AT34980`	*Unsecure with old code*
`CAL:SECURE:CODE SN123456789`	*Enter new code*

Calibration Count

You can query the instrument to determine how many calibrations have been performed on the entire mainframe, the digital modules, or the internal DMM (*remote interface operation only*). Note that your instrument was calibrated before it left the factory. When you receive your instrument, be sure to read the various counts to determine the initial values.

- The calibration count is stored in non-volatile memory in the mainframe, and does not change when power has been off, after a Factory Reset (`*RST` command), or after an Instrument Preset (`SYSTem:PRESet` command).
- The calibration counts increments up to a maximum of 4,294,967,295 after which they roll over to “0”. Since the value increments by one for each calibration point, a complete calibration may increase the value by many counts.
- The calibration count is also incremented with calibrations of DAC channels on the 34951A Isolated DAC Module and 34952A Multifunction Module.

Remote Interface Operation: `CALibration:COUNt?`

Calibration Message

The instrument allows you to store one message in calibration memory in the mainframe, a digital module, or the internal DMM (*remote interface operation only*). For example, you can store such information as the date when the last calibration was performed, the date when the next calibration is due, the instrument's serial number, or even the name and phone number of the person to contact for a new calibration.

- You can record a calibration message *only* from the remote interface and *only* when the instrument is unsecured. You can read the calibration message whether the instrument is secured or unsecured.
- The calibration message may contain up to 40 characters. From the front panel, you can view 18 characters of the message at a time.
- Storing a calibration message will overwrite any message previously stored in memory.
- The calibration message is stored in non-volatile memory in the mainframe, a digital module, or the internal DMM, and does not change when power has been off, after a Factory Reset (`*RST` command), or after an Instrument Preset (`SYSTem:PRESet` command).

Remote Interface Operation: The following example shows how to store a message in calibration memory on the module in slot 3.

```
CAL:STRING "CAL: 21 NOV 2005",3
```

Factory Reset State

The following tables show the state of the instrument after a `*RST` or `SYSTem:CPON` command is executed.

Measurement Configuration	Factory Reset State
Function	DC Volts
Range	Autorange
Resolution	5½ Digits
Integration Time	1 PLC
Input Resistance	10 MΩ (fixed for all DCV ranges)
Channel Labels	No Change
Channel Delay	Automatic Delay
Reading Format	Reading Only (no units, channel, time)
Sample Count	1 Sample per Trigger
Trigger Count	1 Trigger
Trigger Delay	Automatic Delay
Trigger Source	Immediate

Scanning Operations	Factory Reset State
Scan List	Empty
Reading Memory	All Readings are Cleared
Min, Max, and Average	All Statistical Data is Cleared
Sweep Count	1 Sweep
Trigger Interval	1 Second
Monitor in Progress	Stopped

Mx+B Scaling	Factory Reset State
Scaling State	Off
Gain Factor (“M”)	1
Offset Factor (“B”)	0
Scale Label	Null String (““)

Alarm Limits	Factory Reset State
Alarm Queue	Not Cleared
Alarm State	Off
HI and LO Alarm Limits	0
Alarm Output	Alarm 1
Alarm Output Configuration	Latched Mode
Alarm Output State	Output Lines are Cleared
Alarm Output Slope	Fail = Low

Module Hardware	Factory Reset State
Multiplexer Modules	All Channels Open 2-Wire/1-Wire Mode: No Change
Matrix Modules	All Channels Open 2-Wire/1-Wire Mode: No Change
GP Modules	All Channels Open
RF Modules	Channels b01 and b02 Selected (b=Bank)
Microwave Modules	34945A: All Channel Drives = Default 34946A: Channels 101 and 201 to COM 34947A: Channels 101, 201, and 301 to COM
System Control Modules	34950A: DIO Ports = Input, Count = 0, Trace Patterns are Cleared 34951A: DACs=0 Vdc, Trace Waveforms Cleared 34952A: DIO Ports=Input, Count=0, DACs=0 Vdc 34959A: DIO Ports=Input, All Relay Channels Open

System-Related Operations	Factory Reset State
Display State	On
Error Queue	Errors Not Cleared
Stored States	No Change
System Date	No Change
System Time	No Change
Temperature Units	°C

Instrument Preset State

The following tables show the state of the instrument after a `SYSTem:PRESet` command is executed.

Measurement Configuration	Preset State
Function	No Change
Range	No Change
Resolution	No Change
Integration Time	No Change
Input Resistance	No Change
Channel Labels	No Change
Channel Delay	No Change
Reading Format	No Change
Sample Count	No Change
Trigger Count	No Change
Trigger Delay	No Change
Trigger Source	No Change

Scanning Operations	Preset State
Scan List	No Change
Reading Memory	All Readings are Cleared
Min, Max, and Average	All Statistical Data is Cleared
Sweep Count	No Change
Trigger Interval	No Change
Monitor in Progress	Stopped

Mx+B Scaling	Preset State
Scaling State	No Change
Gain Factor (“M”)	No Change
Offset Factor (“B”)	No Change
Scale Label	No Change

Alarm Limits	Preset State
Alarm Queue	No Change
Alarm State	No Change
HI and LO Alarm Limits	No Change
Alarm Output	No Change
Alarm Output Configuration	No Change
Alarm Output State	Output Lines are Cleared
Alarm Output Slope	No Change

Module Hardware	Preset State
Multiplexer Modules	All Channels Open 2-Wire/1-Wire Mode: No Change
Matrix Modules	All Channels Open 2-Wire/1-Wire Mode: No Change
GP Modules	All Channels Open
RF Modules	Channels b01 and b02 Selected (b=Bank)
Microwave Modules	34945A: All Channel Drives = Default 34946A: Channels 101 and 201 to COM 34947A: Channels 101, 201, and 301 to COM
System Control Modules	34950A: DIO Ports = Input, Count = 0, Trace Patterns are Cleared 34951A: DACs=0 Vdc, Trace Waveforms Cleared 34952A: DIO Ports=Input, Count=0, DACs=0 Vdc 34959A: DIO Ports=Input, All Relay Channels Open

System-Related Operations	Preset State
Display State	On
Error Queue	Errors Not Cleared
Stored States	No Change
System Date	No Change
System Time	No Change
Temperature Units	°C

THIS PAGE HAS BEEN INTENTIONALLY LEFT BLANK.

4 Introduction to the Plug-In Modules for the 34980A

User's Guides for the 34980A's Plug-In Modules 232
Available Modules, at a Glance 233
Slot and Channel Addressing Scheme 235
Interconnection Solutions Overview 237
Module Considerations 239

This chapter provides an overview of the plug-in modules available for the 34980A. For specific instructions applicable to a particular module, consult that module's User's Guide (see "User's Guides for the 34980A's Plug-In Modules" on page 232 for a list of these manuals).

User's Guides for the 34980A's Plug-In Modules

The following separate User's Guides provide detailed operating instructions for the plug-in modules.

– PDF versions of these User's Guides can be download at www.keysight.com/find/34980A.

Keysight Part #	Covers Modules	Title
34980-90021	34921A - 34925A	LF Multiplexer Module User's Guide
34980-90031	34931A - 34933A	Matrix Module User's Guide
34980-90034	34934A	High Density Matrix Module User's Guide
34980-90037	34937A - 34939A	General Purpose Switch Module User's Guide
34980-90041	34941A - 34942A	RF Multiplexer Module User's Guide
34980-90045	34945A	Microwave Switch/Attenuator Driver Module User's Guide
34980-90046	34946A - 34947A	Microwave Switch/Driver Module User's Guide
34980-90050	34950A	64-Bit Digital I/O and Counter Module User's Guide
34980-90051	34951A	4-Channel Isolated D/A Converter Module User's Guide
34980-90052	34952A	Multifunction Module User's Guide
34980-90059	34959A	Breadboard Module User's Guide

Available Modules, at a Glance

Module	Description	Max volts	Switch/Carry Current	BW (MHz)	Scan ch/sec	Thermal Offset	Comments
Multiplexer Modules							
34921A	40-channel armature multiplexer w/low thermal offset	±300V[1]	1A/2A	45 MHz	100	<3 µV	Temperature reference 4 current channels Config as 2- or 4-wire
34922A	70-channel armature multiplexer	±300V[1]	1A/2A	25 MHz	100	<3 µV	Config as 2- or 4-wire
34923A	40/80-channel reed multiplexer	±150V[2]	0.5A/1.5A	45 MHz	500	<50 µV	Config as 1-, 2- or 4-wire
34924A	70-channel reed multiplexer	±150V[2]	0.5A/1.5A	25 MHz	500	<50 µV	Config as 2- or 4-wire
34925A	40/80-channel optically isolated FET multiplexer	$\pm 80V_{peak}$	0.02A	1 MHz	1000	<3 µV	Config as 1-, 2- or 4-wire
Matrix Modules							
34931A	Dual 4x8 armature matrix	±300V[1]	1A/2A	30 MHz	100	<3 µV	Backplane expandable
34932A	Dual 4x16 armature matrix	±300V[1]	1A/2A	30MHz	100	<3 µV	Backplane expandable
34933A	Dual/Quad 4x8 reed matrix	±150V[2]	0.5A/1.5A	30 MHz	500	<50 µV	Backplane expandable Config as 1- or 2- wire
34934A	Quad 4x32 reed matrix	$\pm 100V_{peak}$	0.5A/0.5A	20 MHz	500	<50 µV	Row expansion kit. Config as 1- or 2- wire
General Purpose Modules							
34937A	28-channel Form C and 4-channel Form A	±300 V[1] ±250 VAC[3]	1A/2A 5A	10 MHz	N/A	<3 µV <3 µV	
34938A	20-channel 5-amp Form A	±250 VAC[3]	5A/7A	1 MHz	N/A	<3 µV	
34939A	64-channel Form A	±100V[4]	1A/2A	10 MHz	N/A	<3 µV	

1 Pollution Degree 1 ±300 Vrms or VDC; Pollution Degree 2 ±100 Vrms or VDC

2 Pollution Degree 1 ±150 Vpeak; Pollution Degree 2 ±100 Vpeak

3 Pollution Degree 1 ±250 Vrms or 30 VDC; Pollution Degree 2 ±100 Vrms or 30 VDC

4 Pollution Degree 1 and Pollution Degree 2 ±100 Vrms or VDC

Module	Description	Insertion Loss	Isolation	Freq Range	VSWR	Input Impedance	Comments
RF and Microwave Modules							
34941A	Quad 1x4 50Ω 3GHz RF multiplexer	0.6 dB	> 58 dB	3 GHz	< 1.25	50Ω	@ 1 GHz
34942A	Quad 1x4 75Ω 1.5GHz RF multiplexer	0.6 dB	> 60 dB	1.5 GHz	< 1.35	75Ω	@ 1 GHz
34945A/ 34945EXT	Microwave switch/attenuator driver	Can drive up to 64 external switch coils; 32 SPDT switches, 8 multiport switches, 8 attenuators, or your own combination. Expand with additional 34945EXTs.					
34946A	Dual 1x2 SPDT terminated microwave switch.	< 0.42 dB < 0.69 dB < 0.8 dB	> 85 dB > 67 dB > 60 dB	4 GHz or 20 GHz 26.5 GHz	< 1.15 < 1.30 < 1.6	50Ω	@ 4 GHz @ 20 GHz @ 26.5 GHz
34947A	Triple 1x2 SPDT unterminated microwave switch	< 0.42 dB < 0.69 dB < 0.8 dB	> 85 dB < 0.69 dB < 0.8 dB	4 GHz or 20 GHz 26.5 GHz	< 1.15 < 1.30 < 1.6	50Ω	@ 4 GHz @ 20 GHz @ 26.5 GHz

Module	Description	Comments
System Control Modules		
34950A	64-bit digital I/O with memory and counter	Eight 8-bit digital I/O channels with programmable polarity, thresholds up to 5V, with handshaking protocols and pattern memory. Two 10MHz frequency counters and programmable clock output to 20 MHz.
34951A	4-channel isolated D/A converter with waveform memory	Output DC voltage up to ± 16 V or DC current up to ± 20 mA. Output waveforms with a 200 kHz update rate and 16 bits of resolution. Use on-board memory to create point-to-point waveforms with more than 500,000 points.
34952A	Multifunction module with 32-bit DIO, 2-ch D/A and totalizer	Four 8-bit digital I/O channels, two ± 12-V analog outputs, and a 100 kHz gated totalizer.
34959A	Breadboard module	Create your own custom designs with access to the +12V and +5V supplies, 16 GPIO ports and 28 relay drivelines.

Slot and Channel Addressing Scheme

The eight module slots in the 34980A are arranged as shown below.

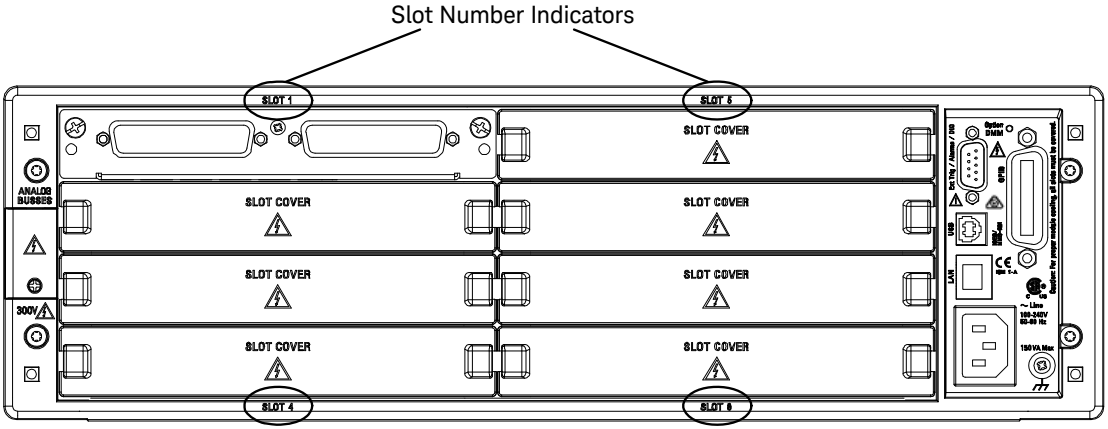

The slot and channel addressing scheme for the 34980A follows the form *sccc* where *s* is the mainframe slot number (1 through 8) and *ccc* is the three-digit channel number. Note that MUX channels numbers are derived differently from matrix modules, and channel numbers for matrix modules are derived differently between 1-wire and 2-wire configuration modes.

Displayed Number...	Means This...	Determined by...
1014	A MUX module is in slot 1, channel of interest is 14. This channel is labeled on the simplified schematics as 014 on Bank 1 of each MUX module.	MUX module channel numbers are determined by the numbers assigned to the switches on each bank. Channel numbers contain three digits.
3921	A MUX or matrix module is in slot 3, channel of interest is 921 (Analog Bus relay on ABus1)	MUX and matrix channel numbers for the Analog Bus relays are determined by the number assigned to the relays.
5304	A 34931A, 34932A, 34933A (2-wire mode) matrix module is in slot 5, crosspoint is row 3, column 4.	Matrix module (in 2-wire mode) channel numbers are derived from the crosspoint or intersection of rows and columns, columns having two digits).
2437	A 34933A matrix module in 1-wire mode is in slot 2, matrix of interest is 4, crosspoint is row 3, column 7.	34933A matrix module (in 1-wire mode) channel numbers are derived from a specific matrix number and the crosspoint or intersection of rows and columns on that matrix.

Interconnection Solutions Overview

Depending on your specific requirements, you can connect your DUT to the 34980A using the following optional interconnection solutions. See the 34980A Product Data Sheet for additional information. See "Installing and Connecting Modules" on page 58 for specific module installation and wiring instructions.

Terminal Blocks Detachable terminal blocks are available for the low-frequency modules and offer a flexible method for connecting external wiring. Each terminal block is customized for a specific module (not available for RF and microwave modules).

Ordering Information: 349*xx*T (e.g., 34921T, 34922T, etc.)

Shielded Cables Standard cables are available for 50-pin D-sub and 78-pin D-sub connectors. Depending on the module and your specific requirements, one or two cables may be required per module.

Ordering Information:
Y1135A (1.5 meters, 50-pin D-sub, 300V, 3A Max)
Y1136A (3 meters, 50-pin D-sub, 300V, 3A Max)
Y1137A (1.5 meters, 78-pin D-sub, 300V, 1A Max)
Y1138A (3 meters, 78-pin D-sub, 300V, 1A Max)

Solder Cup Connector Kits These connector kits are available if you want to build your own custom cables.

Ordering Information:
Y1139A (50-pin D-sub female, 125V, 7.5A Max for 34921/23/25/31/32/33/37/38)
Y1140A (78-pin D-sub female, 60V, 7.5A Max for 34922/24)
Y1141A (50-pin D-sub male, 125V, for 34951/52)
Y1142A (78-pin D-sub male, 60V, for 34950)

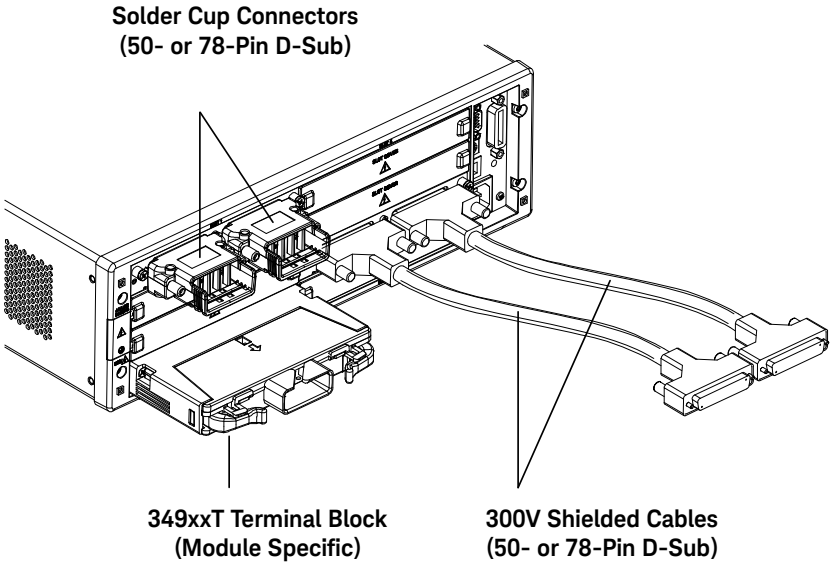
Solder Cup Connectors
(50- or 78-Pin D-Sub)
349xxT Terminal Block
(Module Specific)
300V Shielded Cables
(50- or 78-Pin D-Sub)

Module Considerations

This section lists important items and actions that can affect the operation of your modules.

General Considerations

NOTE **To reduce wear on the internal DMM relays, wire *like* functions on adjacent channels.**

Environmental Operating Conditions

These modules are designed to operate in a temperature range of 0 °C to +55 °C with non-condensing humidity. The maximum humidity is 80% R.H. at 40°C and decreases linearly to 37% R.H. at 55°C. Do not use in locations where conductive dust or electrolytic salt dust may be present.

These modules should be operated in an indoor environment where temperature and humidity are controlled. Condensation can pose a potential shock hazard. Condensation can occur when the modules are moved from a cold to a warm environment, or if the temperature and/or humidity of the environment changes quickly.

The table on page 240 shows maximum voltage, current and power dissipation ratings for each module. If conditions change, ensure that condensation has evaporated and the instrument has thermally stabilized until pollution degree 1 conditions are restored before turning on power to the equipment.

NOTE ***Pollution Degree 1*: No pollution or only dry, non-conductive pollution occurs. The pollution has no influence (on insulation) (IEC 61010-1).**

NOTE ***Pollution Degree 2*: Normally only non-conductive pollution occurs. Occasionally, a temporary conductivity (leakage current between isolated conductors) caused by condensation can be expected (IEC 61010-1).**

CAUTION For proper module cooling, all unused slots must be covered.

Environmental Operating Limits (current and power dissipation) for the Plug-In Modules

Modules	Pollution Degree 1	Pollution Degree 2	Transients
Multiplexer 34921A Terminal Block 34921T	40 channels, ±300 Vrms or VDC, 45MHz, 1A (switched) / 2A (carry), 60VA per channel	40 channels, ±100 Vrms or VDC, 45MHz, 1A (switched) / 2A (carry), 60VA per channel	1000Vpk
Multiplexer 34922A Terminal Block 34922T	70 channels ±300 Vrms or VDC, 25MHz, 1A (switched) / 2A (carry), 60VA per channel	70 channels, ±100 Vrms or VDC, 25MHz, 1A (switched) / 2A (carry), 60VA per channel	1000Vpk
Multiplexer 34923A Terminal Block 34923T	40/80 channels, ±150Vpeak, 45MHz, 0.5A (switched) / 1.5A (carry), 10VA per channel	40/80 channels, ±100Vpeak, 45MHz, 0.5A (switched) / 1.5A (carry), 10VA per channel	750Vpk
Multiplexer 34924A Terminal Block 34924T	35/70 channels, ±150Vpeak, 25MHz, 0.5A (switched) / 1.5A (carry), 10VA per channel	35/70 channels, ±100Vpeak, 25MHz, 0.5A (switched) / 1.5A (carry), 10VA per channel	750Vpk
Multiplexer 34925A Terminal Block 34925T	40/80 channels, ±80Vpeak, 1MHz, 0.02A	40/80 channels, ±80Vpeak, 1MHz, 0.02A	1000Vpk
Matrix Switch 34931A Terminal Block 34931T	Dual 4x8 matrix, ±300Vrms or VDC, 30MHz, 1A (switched) / 2A (carry), 60VA per channel	Dual 4x8 matrix, ±100Vrms or VDC, 30MHz, 1A (switched) / 2A (carry), 60VA per channel	1000Vpk
Matrix Switch 34932A Terminal Block 34932T	Dual 4x16 matrix, ±300Vrms or VDC, 30MHz, 1A (switched) / 2A (carry), 60VA per channel	Dual 4x16 matrix, ±100 Vrms or VDC, 30MHz, 1A (switched) / 2A (carry), 60VA per channel	1000Vpk
Matrix Switch 34933A Terminal Block 34933T	Dual/quad 4x8 matrix ±150Vpeak, 30MHz, 0.5A (switch) / 1.5A (carry), 10VA/ channel	Dual/quad 4x8 matrix, ±100Vpeak, 30MHz, 0.5A (switch) / 1.5A (carry), 10VA/channel	750Vpk
Reed Matrix 34934A Terminal Block 34934T Configuration Block 34934C	Quad 4x32 matrix, ±100Vpk, .5A (switch)/.5A (carry) 10VA/channel	Quad 4x32 matrix, ±100Vpk, .5A (switch)/.5A (carry) 10VA/channel	450Vpk

Environmental Operating Limits (current and power dissipation) for the Plug-In Modules

Modules	Pollution Degree 1	Pollution Degree 2	Transients
General Purpose Switch 34937A Terminal Block 34937T	– 28 channels Form C, ±300Vrms or VDC, 10MHz, 1A (switch) / 2A (carry), 60VA per channel – 4 channels Form A, ±250Vrms or 30VDC, 10MHz, 5A, 150VA per channel – Differential Voltage FormC - FormA 300Vrms or VDC	– 28 channels Form C, ±100Vrms or VDC, 10MHz, 1A (switch) / 2A (carry), 60VA per channel – 4 channels Form A, ±100 Vrms or 30VDC, 10MHz, 5A, 150VA per channel – Different Voltage FormC - Form A 100Vrms or VDC	1000Vpk
General Purpose Switch 34938A Terminal Block 34938T	20 channels, Form A, ±250 Vrms or 30VDC, 1MHz, 5A (switch) / 7A (carry), 60VA per channel	20 channels, Form A, ±100Vrms or 30VDC, 1MHz, 5A (switch) / 7A (carry), 60VA per channel	1000Vpk
General Purpose Switch 34939A Terminal Block 34939T	64 channels, Form A, ±100Vrms or VDC, 10MHz, 1A (switch) / 2A (carry), 60VA per channel	64 channels, Form A, ±100Vrms or VDC, 10MHz, 1A (switch) / 2A (carry), 60VA per channel	1000Vpk
Multiplexer 34941A Terminal Block 34941T	Quad 1x4 50Ω, 3GHz, 0.5A, 10W per channel	Quad 1x4 50Ω, 3GHz, 30V, 0.5A, 10W per channel	
Multiplexer 34942A Terminal Block 34942T	Quad 1x4 75Ω, 1.5GHz, 30V, 0.5A, 10W per channel	Quad 1x4, 75Ω, 1.5GHz, 3V, 0.5A, 10W per channel	
Microwave Switch/Attenuator Driver 34945A Terminal Block 34945T 34945EXT			
Microwave Switch 34946A Terminal Block 34946T	Dual 1x2 SPDT Terminated, 7Vdc, 1W per channel, 26.5GHz	Dual 1x2 SPDT Terminated, 7Vdc, 1W per channel	
Microwave Switch 34947A Terminal Block 34947T	Triple 1.2 SPDT Unterminated, 7Vdc, 26.5Ghz	Triple 1.2 SPDT Unterminated, 7Vdc, 26.5Ghz	
Digital I/O 34950A Terminal Block 34950T	64-bit, 5V 24mA	64-bit, 5V 24mA	
D/A Converter 34951A Terminal Block 34951T	4 channel 16V, 20mA	4 channel 16V, 20mA	
34952A Multifunction Modulex	34-bit DIO, 2-ch D/A and Totalizer, $42V_{peak}$	34-bit DIO, 2-ch D/A and Totalizer, $42V_{peak}$	

Electrical Operating Conditions

WARNING Under certain conditions, hazardous voltage levels capable of causing injury or death may remain even after external circuits have been disconnected. To avoid electrical shock, remove the main power cord from the 34980A and ensure all connections to the DUT, including field wiring to the instrument and the analog bus (if present) are deenergized and all circuits are discharged before coming in contact with the system. Ensure no hazardous voltages remain on any accessible before handling any part of the instrument and test setup, making connections to the system, removing covers or cleaning the instrument.

Transients

WARNING Modules 34923A, 34924A, 34933A are rated for a maximum transient of 750 Vpeak. Module 34934A is rated for a maximum transient of 450 Vpeak. All other modules are rated for 1000 Vpeak. Typically, these transient overvoltages result from switching inductive loads or from nearby lighting strikes. The lightning-caused transient overvoltages that may occasionally occur on a mains power outlets may be as high as 2500 Vpeak.

The 34941A, 34942A, 34945A, 34946A, 34947A, 34950A, 34951A, 34952A and 34959A modules are intended for only low-voltage applications, and shall not be connected to circuits that may generate or conduct large transient voltages.

WARNING Do not connect the Analog Buses directly to a mains power outlet. If it is necessary to measure a mains voltage or any circuit where a large inductive load may be switched, you must add signal conditioning elements to reduce the potential transients before they reach the Analog Buses. Transient ratings are listed above.

WARNING

HIGH ENERGY SOURCES

The Analog Buses are designed to handle inputs up to their rated currents or their rated powers, whichever is less. Under certain fault conditions, high energy sources could provide substantially more current or power than the instrument can handle. It is important to provide external current limiting, such as fuses if the inputs are connected to high-energy sources. The overcurrent protection is to be rated for the maximum available short circuit current of the hazardous sources. Ensure that the current limiting devices / snubber circuits are appropriate for the signal being tested. Failure to do so may result in hazardous conditions such as fire or shock and could lead to personal injury or death. Refer to Chapter 5 for the current limiting graphs of 34890A.

THIS PAGE HAS BEEN INTENTIONALLY LEFT BLANK.

5 34980A Current Limiting Graphs

34980A Current Limiting Graphs 246

This section provides the current limiting graphs for the 34980A.

34980A Current Limiting Graphs

Modules	Pollution Degree 1	Pollution Degree 2	Transients
Analog Bus 34980A Multiplexer 34921A Terminal Block 34921T	40 channels, 45 MHz ±300 Vrms or VDC [1] 1A (switch) / 2A (carry) 60VA per channel [2] Volt-Hertz limit: 10^8 Initial closed channel resistance: <1.5 Ω [3,4]	40 channels, 45MHz ±100 Vrms or VDC [1] 1A (switch) / 2A (carry) 60VA per channel [2] Volt-Hertz limit: 10^8 Initial closed channel resistance: <1.5 Ω [3,4]	1000Vpk
Multiplexer 34922A Terminal Block 34922T	70 channels, 25MHz ±300 Vrms or VDC [1] 1A (switch) / 2A (carry) 60VA per channel [2] Volt-Hertz limit: 10^8 Initial closed channel resistance: <1.5 Ω [3,4]	70 channels, 25MHz ±100 Vrms or VDC [1] 1A (switch) / 2A (carry) 60VA per channel [2] Volt-Hertz limit: 10^8 Initial closed channel resistance: <1.5 Ω [3,4]	1000Vpk
Matrix Switch 34931A Terminal Block 34931T	Dual 4x8 matrix, 30MHz ±300Vrms or VDC [1] 1A (switch) / 2A (carry) 60VA per channel [2] Volt-Hertz limit: 10^8 Initial closed channel resistance: <1.5 Ω [3,4]	Dual 4x8 matrix, 30MHz ±100Vrms or VDC [1] 1A (switch) / 2A carry 60VA per channel [2] Volt-Hertz limit: 10^8 Initial closed channel resistance: <1.5 Ω [3,4]	1000Vpk
Matrix Switch 34932A Terminal Block 34932T	Dual 4x16 matrix, 30MHz ±300Vrms or VDC [1] 1A (switch) / 2A (carry) 60VA per channel [2] Volt-Hertz limit: 10^8 Initial closed channel resistance: <1.5 Ω [3,4]	Dual 4x16 matrix, 30MHz ±100 Vrms or VDC [1] 1A (switch) / 2A (carry) 60VA per channel [2] Volt-Hertz limit: 10^8 Initial closed channel resistance: <1.5 Ω [3,4]	1000Vpk

Breadboard 34959A	40 channels, 45 MHz ±300 Vrms or VDC [1] 1A (switch) / 2A (carry) 60VA per channel [2] Volt-Hertz limit: 10^8 Initial closed channel resistance: <1.5 Ω [3,4]	40 channels, 45MHz ±100 Vrms or VDC [1] 1A (switch) / 2A (carry) 60VA per channel [2] Volt-Hertz limit: 10^8 Initial closed channel resistance: <1.5 Ω [3,4]	1000Vpk

The overcurrent protection devices will be rated, or the snubber circuits will limit the current, according to:

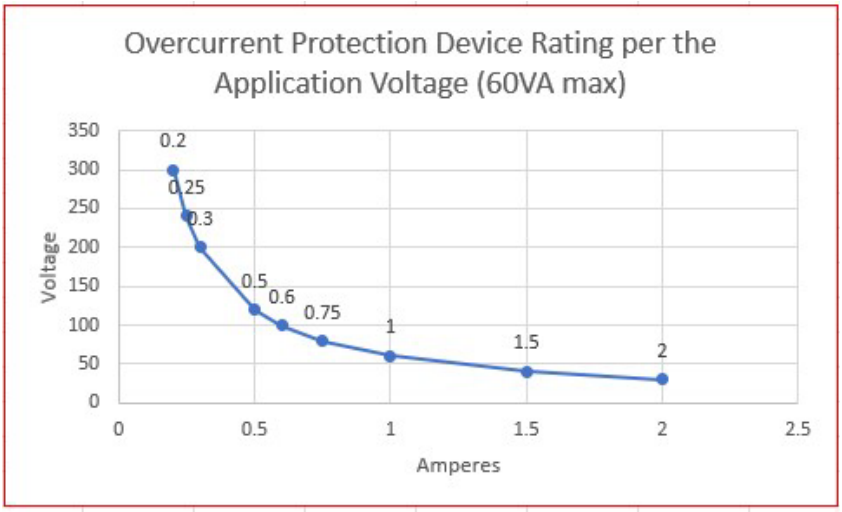

1. DC or AC RMS voltage, channel-to-channel or channel-to-earth.
2. Limited to 6 W of channel resistance power loss per module.
3. Into analog bus. System errors are included in the internal DMM measurement accuracy specifications.
4. Channel resistance is typically < 1.5 Ω but can go as high as 50 Ω when a channel is used in measurement applications with < 10 mA load current. Increased relay channel resistance for measurements with load currents below 10 mA can occur on cards that have been out of service or following relay inactivity for periods of greater than 1 week. Switching relays for 2K cycles prior to use may reduce the variation in channel resistance. Keysight recommends the use of 4-wire Ohms for resistance measurements. For high accuracy voltage measurements, select the DMM input resistance setting of >10 G ohms to minimize the impact of relay contact resistance.

Modules	Pollution Degree 1	Pollution Degree 2	Transients
Multiplexer 34923A Terminal Block 34923T	40/80 channels, 45MHz ±150Vpeak [1] 0.5A [2] / 0.05A [3] (switch) 1.5A [2] / 0.05A [3] (carry) 10VA per channel [5] Volt-Hertz limit: 10^8 Initial closed channel resistance [2,6,7]: <1.5 Ω/ 200 Ω	40/80 channels, 45MHz ±100Vpeak [1] 0.5A [2] / 0.05A [3] (switch) 1.5A [2] / 0.05A [3] (carry) 10VA per channel [5] Volt-Hertz limit: 10^8 Initial closed channel resistance [2,6,7]: <1.5 Ω/ 200 Ω	750Vpk
Multiplexer 34924A Terminal Block 34924T	35/70 channels, 25MHz ±150Vpeak [1] 0.5A [2] / 0.05A [3] (switch) 1.5A [2] / 0.05A [3] (carry) 10VA per channel [5] Volt-Hertz limit: 10^8 Initial closed channel resistance [2,6,7]: <1.5 Ω/ 200 Ω	35/70 channels, 25MHz ±100Vpeak [1] 0.5A [2] / 0.05A [3] (switch) 1.5A [2] / 0.05A [3] (carry) 10VA per channel [5] Volt-Hertz limit: 10^8 Initial closed channel resistance [2,6,7]: <1.5 Ω/ 200 Ω	750Vpk
Matrix Switch 34933A Terminal Block 34933T	Dual/quad 4x8 matrix, 30MHz ±150Vpeak [1] 0.5A [2] / 0.05A [3] (switch) 1.5A [2] / 0.05A [3] (carry) 10VA/channel [4,5] Volt-Hertz limit: 10^8 Initial closed channel resistance [2,6]: <1.5 Ω/ 200 Ω	Dual/quad 4x8 matrix, 30MHz ±100Vpeak [1] 0.5A [2] / 0.05A [3] (switch) 1.5A [2] / 0.05A [3] (carry) 10VA/channel [4,5] Volt-Hertz limit: 10^8 Initial closed channel resistance [2,6]: <1.5 Ω/ 200 Ω	750Vpk

The overcurrent protection devices will be rated, or the snubber circuits will limit the current, according to:

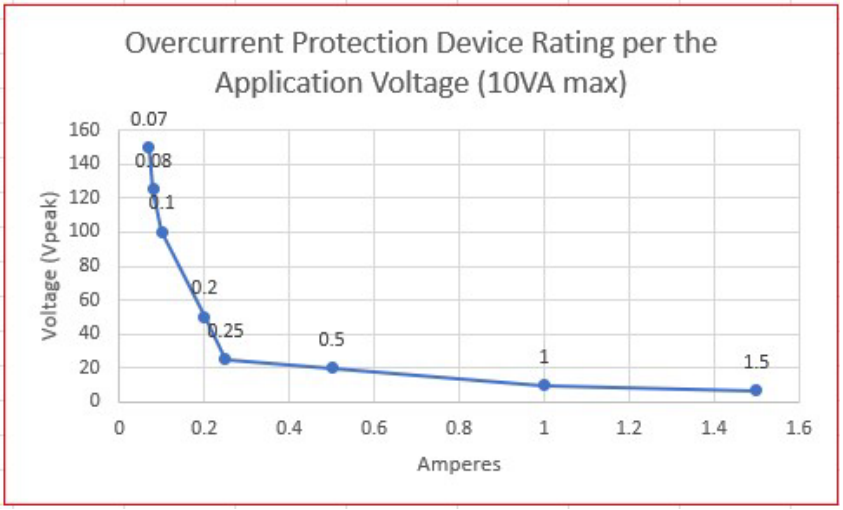

1. Peak voltage, channel-to-channel or channel-to-earth.
2. With input resistors bypassed. Bypassing resistors will reduce the lifetime of relays. See the rated load relay life characteristics.
3. With input protection resistors: 2 x 100 Ω ±5%; 0.5W; TC = ±200 ppm/°C. The series resistance of the 34923/24 limits the use of the 100 Ω range.
4. Power restrictions allow only 20 channels to be closed at one time.
5. Limited to 6 W of channel resistance power loss per module.
6. Into analog bus. System errors are included in the internal DMM measurement accuracy specifications.
7. Channel resistance is typically < 1.5 Ω but can go as high as 50 Ω when a channel is used in measurement applications with < 10 mA load current. Increased relay channel resistance for measurements with load currents below 10 mA can occur on cards that have been out of service or following relay inactivity for periods of greater than 1 week. Switching relays for 2K cycles prior to use may reduce the variation in channel resistance. Keysight recommends the use of 4-wire Ohms for resistance measurements. For high accuracy voltage measurements, select the DMM input resistance setting of >10 G ohms to minimize the impact of relay contact resistance.

Modules	Pollution Degree 1	Pollution Degree 2	Transients
Multiplexer 34925A Terminal Block 34925T	40/80 channels, 1MHz ±80Vpeak [1] 0.02A [2] 1.6VA/channel [3] Volt-Hertz limit: 10^7 Initial closed channel resistance [4,5,6]: <700 Ω	40/80 channels, 1MHz ±80Vpeak [1] 0.02A [2] 1.6VA/channel [3] Volt-Hertz limit: 10^7 Initial closed channel resistance [4,5,6]: <700 Ω	1000Vpk

The overcurrent protection devices will be rated, or the snubber circuits will limit the current, according to:
Overcurrent Protection Device Rating per Application Voltage (1.6VA max) = 0.02A

1. Peak voltage, channel-to-channel or channel-to-earth.
2. DC or peak AC current.
3. Limited to 6 W of channel resistance power loss per module.
4. With input protection resistors: 2 x 100 Ω ±5%; 0.5W; TC = ±200 ppm/°C. The series resistance of the 34925A limits the use of the 100 Ω range.
5. Into analog bus. System errors are included in the internal DMM measurement accuracy specifications.
6. Channel resistance is typically < 1.5 Ω but can go as high as 50 Ω when a channel is used in measurement applications with < 10 mA load current. Increased relay channel resistance for measurements with load currents below 10 mA can occur on cards that have been out of service or following relay inactivity for periods of greater than 1 week. Switching relays for 2K cycles prior to use may reduce the variation in channel resistance. Applies to the 34921A and 34922A. Keysight recommends the use of 4-wire Ohms for resistance measurements. For high accuracy voltage measurements, select the DMM input resistance setting of >10 G ohms to minimize the impact of relay contact resistance.

Modules	Pollution Degree 1	Pollution Degree 2	Transients
Reed Matrix 34934A Terminal Block 34934T Configuration Block 34934C	Quad 4x32 matrix, 20 MHz ±100Vpk [1] 0.5A (switch) / 0.5 A (carry) 10VA/channel [2,3] Volt-Hertz limit 10^8 Initial closed channel resistance [4]: <1 Ω / 100 Ω	Quad 4x32 matrix, 20 MHz ±100Vpk [1] 0.5A (switch) / 0.5A (carry) 10VA/channel [2,3] Volt-Hertz limit 10^8 Initial closed channel resistance [4]: <1 Ω / 100 Ω	450Vpk

The overcurrent protection devices will be rated, or the snubber circuits will limit the current, according to:

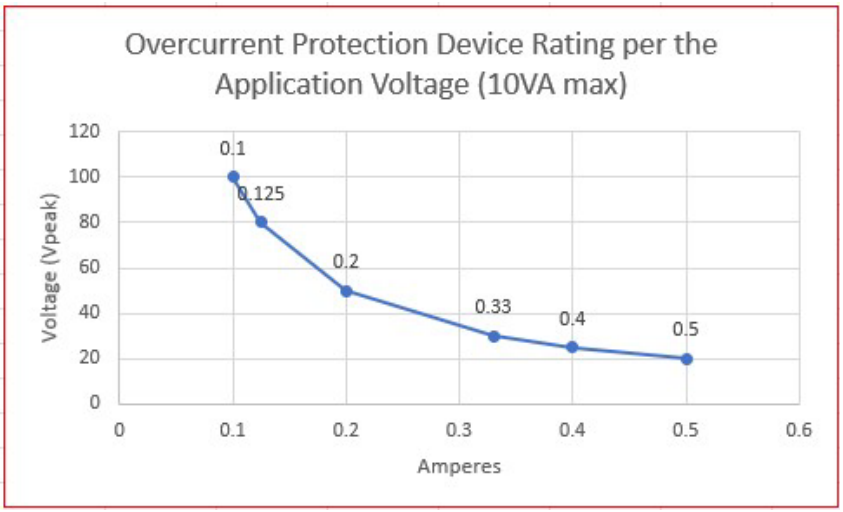

1. Peak voltage, channel-to-channel or channel-to-earth.
2. Limited to 6 W channel resistance power loss per module.
3. Protection Resistors: 100 Ω ± 1%; 0.25W; TC = ±100ppm/°C.
4. Into analog bus. System errors are included in the internal DMM measurement accuracy specifications.

Modules	Pollution Degree 1	Pollution Degree 2	Transients
General Purpose Switch 34937A Terminal Block 34937T	28 channels Form C, 10 MHz – ±300Vrms or VDC [1] – 1A (switch) / 2A (carry) – 60VA per channel [2] – Volt-Hertz limit 10^8 – Initial closed channel resistance 125mΩ 4 channels Form A, 10 MHz – ±250Vrms or 30VDC [1] – 5A (switch) / 7A (carry) – 150VA per channel [2] – Volt-Hertz limit 10^8 – Initial closed channel resistance 50mΩ – Differential Voltage FormC - FormA 300Vrms or VDC	28 channels Form C, 10MHz – ±100Vrms or VDC [1] – 1A (switch) / 2A (carry) – 60VA per channel [2] – Volt-Hertz limit 10^8 – Initial closed channel resistance 125mΩ 4 channels Form A, 10 MHz – ±100 Vrms or 30VDC [1] – 5A (switch) / 7A (carry) – 150VA per channel [2] – Volt-Hertz limit 10^8 – Initial closed channel resistance 50mΩ – Differential Voltage FormC - Form A 100Vrms or VDC	1000Vpk

The overcurrent protection devices will be rated, or the snubber circuits will limit the current, according to:

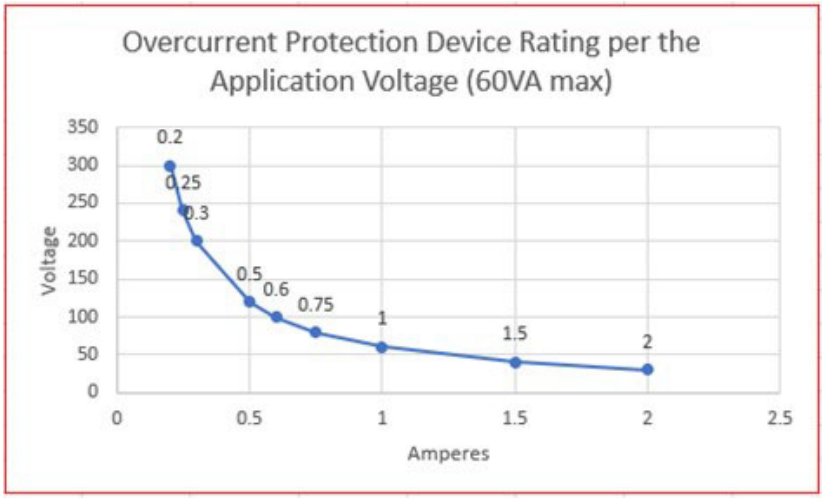

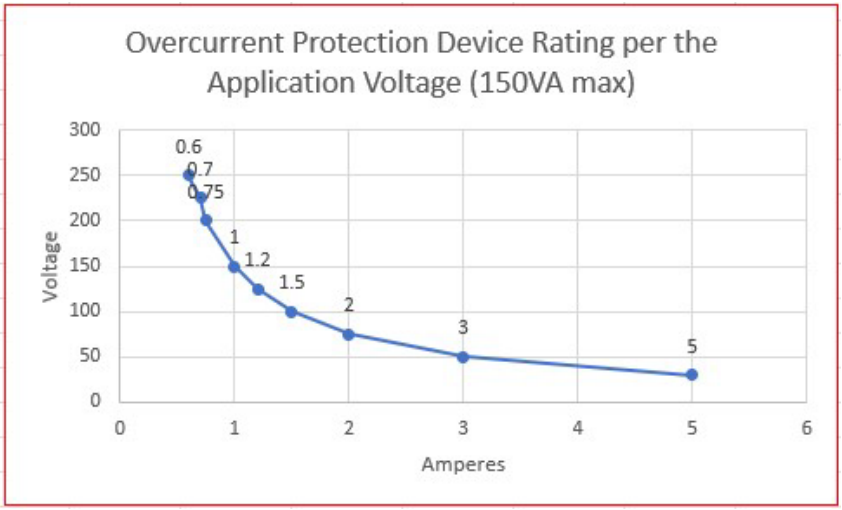

1. DC or AC RMS voltage, channel-to-channel or channel-to-earth.
2. Limited to 6 W of channel resistance power loss per module.

Modules	Pollution Degree 1	Pollution Degree 2	Transients
General Purpose Switch 34938A Terminal Block 34938T	20 channels, Form A, 1MHz ±250 Vrms or 30VDC [1] 5A (switch) / 7A (carry) 150VA per channel	20 channels, Form A, 1MHz ±100Vrms or 30VDC [1] 5A (switch) / 7A (carry) 150VA per channel	1000Vpk

The overcurrent protection devices will be rated, or the snubber circuits will limit the current, according to:

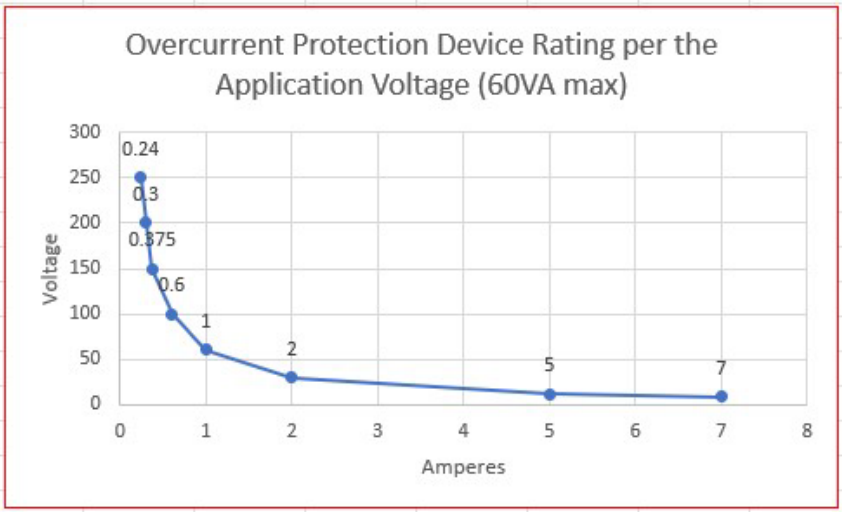

1. DC or AC RMS voltage, channel-to-channel or channel-to-earth.

Modules	Pollution Degree 1	Pollution Degree 2	Transients
General Purpose Switch 34939A Terminal Block 34939T	64 channels, Form A, 10MHz ±100Vpeak 1A (switch) / 2A (carry) 60VA [1] per channel Volt-Hertz 10^8 Initial closed channel resistance: <125mΩ	64 channels, Form A, 10MHz ±100Vpeak 1A (switch) / 2A (carry) 60VA [1] per channel Volt-Hertz 10^8 Initial closed channel resistance: <125mΩ	1000Vpk

The overcurrent protection devices will be rated, or the snubber circuits will limit the current, according to:

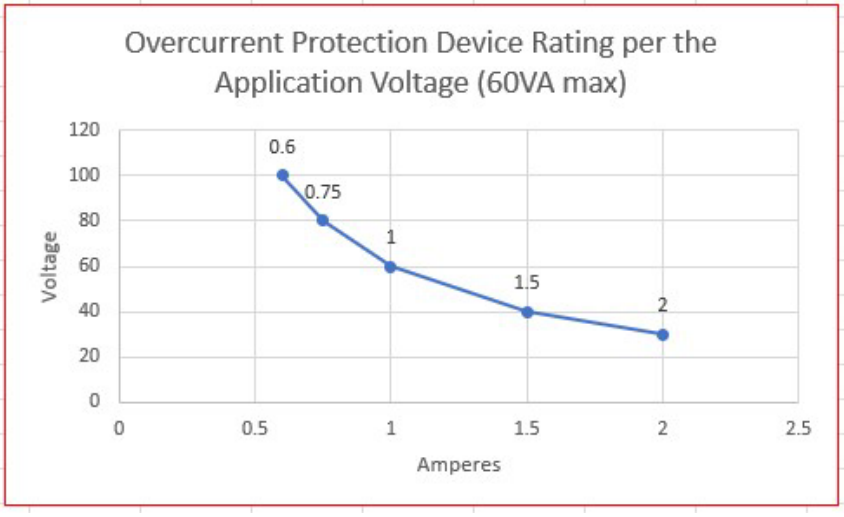

1. Limited to 6 W of channel resistance power loss per module.

THIS PAGE HAS BEEN INTENTIONALLY LEFT BLANK.

6 34980A Safety Guidelines

Safety Guidelines (IEC 61010-1) 258

This section provides the safety guidelines for the 34980A.

Safety Guidelines (IEC 61010-1)

WARNING **Incorporating Safety Guidelines [IEC 61010-1] for Custom Built Circuitry with Hazardous Levels:**

Allows integration of custom-build circuitry into the 34959A Module for interconnection to the 34980A Analog Bus and optional DMM while maintaining levels of protection. The following references IEC 61010-1 requirements when working with hazardous voltages.

1 **WARNING**: Hazardous voltage levels capable of causing death, may be present on a channel. Use extreme caution when handling, testing and adjusting this instrument. Any voltages greater than 30 Vrms, 42.4 Vpeak and 60 Vdc are considered hazardous (IEC 61010-1).

2 **WARNING**: Safety of any system incorporating the equipment is the responsibility of the assembler of the system.

3 **WARNING**: Only qualified personnel who are aware of the hazards involved shall install, remove or configure the 34959A breadboard for the 34980A mainframe. Before touching any installed accessory, turn off all power to the mainframe and terminal blocks, and to all external devices connected to the mainframe or terminal blocks. Under certain conditions, hazardous voltage levels capable of causing injury or death may remain even after external circuits and the 34980A instrument have been disconnected. To avoid injuries, always disconnect the power and discharge all circuits before touching them.

   Ensure all circuits are fully discharged before coming in contact with the system. Ensure no hazardous voltages remain on any accessible before handling any part of the instrument and test setup, making connections to the system, removing covers or cleaning the instrument. Failure to recognize and observe normal safety precautions could result in personal injury or death.

4 **WARNING**: The maximum common mode input to any one system component within the system installation is not to exceed the maximum stated ratings.

WARNING

Printed Circuit Board Design Rules for Hazardous Voltages [IEC 61010-1]:

Follow industry quality and workmanship that meets IPC standards or equivalent to ensure safety levels of protection are maintained.

If your planned use of the 34959A breadboard module will involve the application of hazardous voltages (>30Vrms AC, >42.4Vpeak or >60V DC), use extreme caution when handling, testing and adjusting this instrument. Refer to the following:

1 Follow local laws and regulations provided by the Authorities Having Jurisdictions.

2 **WARNING**: When interconnecting system components during installation, the overall 34980A and all installed modules for the system and their maximum rated allowable inputs default to the lowest rating of any one system component or module.

3 **WARNING**: It is possible to connect more than one power source at the same time with a matrix. Ensure that hazardous or unwanted conditions are not created by these connections. Failure to recognize or observe normal safety precautions could result in equipment damage and may result in hazardous conditions such as fire or shock and could lead to personal injury or death.

4 **WARNING**: Working with ABUS3 and ABUS4 and closing multiple channels simultaneously are for qualified personnel use only. When working with hazardous voltage levels, intentionally closing of multiple bus and channel relays could cause a potentially lethal hazard on external connections. Use extreme caution when handling and testing and adjusting this instrument. Do not perform these procedures unless qualified to do so.

5 **WARNING**: To ensure minimum safety protection only the following connectors are permitted to be installed: Keysight connectors to be used when the voltage of any one component or interconnecting system components or modules installed with the 34980A mainframe:

- Greater than 30 Vrms, 42.4 Vpeak or 60 Vdc: DB-50 (F) 1253-5854 or DB-78(F) 1253-6007.
- 30 Vrms, 42.4 Vpeak or 60 Vdc or less: DB-50(M) 1253-5853, DB-78(M) 1253-6006, DB-50 (F) 1253-5854 or DB-78(F) 1253-6007.

6 **WARNING**: When soldering wire to the Analog Bus connection holes, take special care to avoid any reduction in PCB artwork spacing layouts or shorts between wires and/or via holes. Shortening these connections may result in hazardous conditions and/or damage to the breadboard module, the 34980A mainframe, other installed modules, or your test circuitry.

7 **WARNING**: When soldering Keysight supplied relays 0490-1954 K101-K104 to the Keysight-supplied PC board, take special care to avoid reducing spacings and/or avoid shorts between pins. Any reduction in spacings or shorting these connections may result in hazardous conditions to personnel and/or damage to the breadboard module, the 34980A mainframe, other installed modules, or your test circuitry.

WARNING

External Wiring for Hazardous Voltages:

To ensure minimum safety insulation when wiring with hazardous voltages, ensure all wiring (both internal and external to the instruments):

1 follow (USA) NFPA 79 Table 12.5.1 Conductor Ampacity and 12.5.5(a) Ambient Temperature Correction Factors (or equivalent National Code requirements) when selecting the AWG required.

2 are rated for at least 2 x the maximum applied voltage of the external source or any interconnecting system modules or external connections.

3 flame rated minimum:

- Wires and cables with overall cross-sectional area of the conductors exceeding 0.5mm^2 meet test of IEC 60332-1-2 (IEC); or
- Wires and cables with overall cross-sectional area of the conductors of 0.5mm^2 or less, the test of IEC 60332-2-2 (IEC); or
- FT-1 of CSA C22.2 No. 0.3 (Canada); or
- VW-1 of UL 1581 (US).

4 temperature rated for the application.

5 classified and suitable to be used external to the enclosure:

- AWM Class II B or A/B - external/interconnecting wires (single- or multiple-conductor constructions with a jacket) and potentially subject to mechanical abuse (Canada)
- AWM Style Use - external interconnection of electronic equipment or appliances (US)

WARNING

Critical Spacings (PCB Creepage) for Customer Supplied Circuitry - IEC 61010-1

WARNING: Hazardous voltage circuits require a minimum trace layout spacings to ensure the minimum level of safety is not compromised:

1 Circuits of opposite polarity.

2 Channel to Channel.

3 Channel to Earthed Chassis.

4 Channel to Non-hazardous control circuitry.

Critical Spacings (PCB Creepage) for Customer Supplied Circuitry (In millimeters) @ 2000m Altitude				
Working Voltage	Pollution Degrees	Outer PCB Layers	*Inner PCB Spacings (thickness between layers)	Inner PCB Spacings (same layer)
80 Vpeak	1 and 2	0.2	0.05	0.05
100 Vac/dc	1 and 2	0.2	0.05	0.05
100 Vpeak	1 and 2	0.2	0.05	0.05
150 Vpeak	1	0.2	0.05	0.05
250 Vac/dc	1	0.6	0.1	0.1
300 Vac/dc	1	0.8	0.1	0.1

WARNING Use only:

- PCB with minimum flammability classification of V-1 or V-0 [IEC 60695-11-10].
- 130 °C
- CTI PLC 3 (CTI Material Group IIIa).
- *Alternative to Inner PCB Spacings and thickness between layers noted above - For multi-layered board each PCB material and stack-up construction to have each prepreg or core be assembled from at least two separate glass layers having a combined dielectric thickness of 0.127 mm (5 mil) or greater and having a dielectric strength specification of 30 kV/mm or better.

NOTE The International Electrotechnical Commission (IEC) Standard 61010-1 (available at www.IEC.ch) lists the construction and insulation requirements for hazardous voltage applications in Pollution Degree Levels 1 and 2.

WARNING **Critical Components for Customer Supplied Circuitry used with Hazardous Voltages [IEC 61010-1]:**

These instruments are evaluated and conform to safety standards:

IEC 61010-1

EN 61010-1

CAN/CSA-C22.2 No 61010-1

ANSI/UL 61010-1

If your planned use of the 34959A breadboard module will involve the application of hazardous voltages (>30Vrms AC, >42.4Vpeak or >60V DC), use extreme caution when handling, testing and adjusting this instrument. To ensure minimum safety protection is maintained, ensure all customer supplied safety components, subassemblies and assemblies:

1 follow local laws and regulations provided by the Authorities Having Jurisdictions.

2 follow IEC 61010-1 requirements for components and subassemblies selection.

3 are rated for at least the maximum applied voltage and current of the external source or any interconnecting system modules or external connections.

4 are suitable for the voltage and current limiting protection of the external sources (see Limiting Current Graphs section of User Guides).

5 have appropriate spacing (creepage along PCB).

6 are temperature rated for the application.

7 tested by a recognized authority to safety requirements meeting or exceeding relevant IEC or other national standards CSA / UL / EN.

Index

Symbols

*RST state, 224
±9.9E+37 (overload), 142

Numerics

10BaseT/100Base Tx, 52
2-wire versus 1-wire mode, 152
34832A BenchLink Data Logger Pro software, 25
34921A 40-Channel Armature Multiplexer Module, 233
34922A 70-Channel Armature Multiplexer Module, 233
34923A 40/80 Channel Reed Multiplexer Module, 233
34924A 70-Channel Reed Multiplexer Module, 233
34925A 40-Channel Optically Isolated FET Multiplexer Module, 233
34931A Dual 4x8 Armature Matrix Module, 233
34932A Dual 4x16 Armature Matrix Module, 233
34933A Dual/Quad 4x8 Reed Martix Module, 233
34934A High Density Matrix Module, 233
34937A 28-Channel Form C and 4-Channel Form A Switch Module, 233
34938A 28-channel, 5 Amp Form A Switch Module, 233
34939A 64-channel, 1 Amp Form A Switch Module, 233
34941A Quad 1x4, 50 Ohm, 3GHz RF Multiplexer Module, 234
34942A Quad 1x4, 75 Ohm, 1.5 GHz RF Multiplexer Module, 234
34945A Microwave Switch Attenuator/Driver Module, 234
34946A Dual 1x2 SPDT Terminated Microwave Switch Module, 234
34947A Triple 1x2 SPDT Unterminated Microwave Switch Module, 234
34950A 64-Bit Digital I/O Module with Memory and Counter, 234
34951A 4-Channel Isolated D/A Converter with Waveform Memory, 234
34952A Multifunction Module with 32-Bit Digital I/O, 2-Channel D/A and Totalizer, 234
34959A Breadboard Module, 234
34980A
  documentation, 111
  simplified block diagram, 27
4W channel pairing, 160
5063-9214 Standard Rack Mount Kit, 70

A

A/D conversion, 37
abort measurements, 137
absolute reading format, 184
ABus connector, 52, 55, 139
ac current measurements, 162
  low frequency filter, 159
ac low frequency filter, 159
ac voltage measurements, 158
  low frequency filter, 159
actuator switches, 47
addressing
  channel, 235
  slots, 235
Advanced key, 75
Agilent Connectivity Guide, 88, 121
Agilent IO Libraries Suite, 88, 121
Agilent VEE, 98
Alarm key, 75
alarm limits, 31
alarm queue, 194
alarms, 194
  Alarm Output connector, 199
  annunciators, 196
  latch mode, 200
  output polarity, 200
  rules, 194
  scanning on alarm, 174
  track mode, 200
  viewing stored data, 198
  with digital modules, 201
Alarms connector, 52, 54, 199
allow full control mode, 103
analog bus connector, 52, 55, 139
annunciators, 56
  alarms, 196
arrow keys, 51
auto-IP address, 125
automatic channel delay, 182
automatic trigger delay, 148
autorange, 142
autorange thresholds, 142
autozero, 146
available documents, 111

B

browser web control page, 102
buttons
  front panel, 50

C

cables, 237
calendar, time and date, 218
calibration, 221
  count, 222
  default code, 221
  message, 223
  securing instrument, 221
  security, 221
  unsecuring instrument, 221
Cancel key, 51

celsius, 153
Chan Advance connector, 54
Chan Closed connector, 52, 54
channel advance, 191
channel closed, 191
channel configuration, 106
channel delay, 181
    automatic delay, 182
Channel key (Configure menu), 74
Channel key (Measure group), 80
channel labels, 150
channel numbering, 235
channel pairing (4W), 160
channel relays
    front panel operation, 78
    remote operation, 105
channel selection, 78
channels
    configuring for measurments, 84
clearing memory, 131
clock, 218
command errors. See 34980A Programmer's Reference Help file
Command History field, 110
communication
    via GPIB, 95
    via isolated LAN, 93
    via site LAN, 90
computer connection, 88
Configure key group, 51, 74
connecting to your PC, 88
connection via USB, 96
connectivity software, 88, 121
connector
    Alarms, 52, 199
    analog bus, 52, 139
    Chan Advance, 52
    Chan Closed, 52
    Ext Trig, 52, 176
    GPIB (IEEE 488.2), 52
    LAN, 52
    USB, 52
    VM Complete, 52
connector pinouts, 54
Control keys, 51
control output, 44
cooling requirements, 240
current measurements, 162
    ac filter, 162
custom channel labels, 150
cycle count, 219

D

DAC output, 45
data acquisition overview, 24
data acuisition circuitry overview, 27
data logger software, 25
date, 218
dc current measurements, 162
dc input resistance, 158
dc voltage measurements, 158
    input resistance, 158
default (reset) state, 224
default gateway, 127
degrees C, 153
degrees F, 153
delay
    trigger, 147
DHCP, 91, 94, 123
differential mode, 152
digital input, 42
digital output, 44
digital voltage output, 45
dimensions
    rack mounting, 72
Display, 115
display
    annunciators, 56
    disabling, 217
    displaying message, 217
    indicators, 56
    number format, 218
DMM
    configuring for measurements, 81
    disabling, 219
DMM key (configure group), 74
DMM key (Measure group), 80
DNS, 128
DNS server, 129
documentation map, 111
domain name, 130
driver installation, 98
drivers, 98
dynamic IP address, 123

E

E3663A Basic Rail Kit, 70
E3664AC Third Party Rail Kit, 71
electrical operating conditions, 134, 242
Enter key, 51
environmental operating conditions, 133, 239
ERROR front panel annunciator, 56
error queue, 215
errors. See 34980A Programmer's Reference Help file
Exit Menu key, 75
exponent entry (Exp) key, 51
Ext Trig connector, 52, 54, 176
external DMM, 191
external scanning, 176
    connections, 191
external trigger connector, 52

F

factory reset state, 224
fahrenheit, 153
fast ac filter, 159, 162
fast filter, 162, 164
firmware
    revision, 205, 212
    web browser interface, 27
firmware updates, 111, 213
format
    number, 218
    reading, 184
four-wire channel pairing, 160
frequency measurements, 164
front panel, 56
    alarms, 196
    annunciators, 56
    control knob, 51
    keys, 50
    menus, 73

operation, 73
Front Panel Display, 115
front-panel display
disabling, 217
displaying message, 217
number format, 218

G

gateway, 127
general purpose modules
specifications, 233
general purpose switch modules
list, 233
general purpose switches, 47
global error queue, 215
GPIB (IEEE 488.2)
address, 122
configuring, 122
connecting the 34980 via, 95
connector, 52
grounding screw, 52

H

high energy sources, 134
host name, 128
HOT front panel annunciator, 57
humidity limits, 133

I

IEEE 488.2 (GPIB)
address, 122
configuring, 122
connector, 52
input resistance, 158
instrument drivers, 98
instrument preset state, 227
instrument specifications. See 34980A Data Sheet (www.agilent.com/find/34980a)
instrument states, 213
integration time, 145
internal DMM, 36
disabling, 219
internet browser interface, 100
IO libraries, 88, 121
IP address
Auto-IP, 125
default, 124
DHCP, 123
entry in web browser, 100
setting, 124
viewing on front panel, 92, 95
IPTS-68 software conversions, 153
isolated LAN
connecting the 34980 via, 93
description, 89
ITS-90 software conversions, 153
IVI-C, IVI-COM, 98

K

kelvins, 153
keyboard operation, 73
keys, front panel, 50
knob, 51

L

labels, 150
LAN
Auto-IP, 125
connector, 52
DHCP, 123
DNS, 128
DNS server, 129
domain name, 130
gateway, 127
host name, 128
IP address, 124
network types, 89
operating the 34980 over, 99
subnet mask, 126
latch mode (alarms), 200
launching the web browser, 100
learn more, 111
Local key, 51
low frequency filter, 159
low frequency timeout, 164

M

main system processor, 38
manual range, 142
matrix modules
list, 233
specifications, 233
matrix switching, 33
Measure key group, 51
Measure keys
operation, 80
measurement
configuration, 81
range, 142
resolution, 143
software, 25
measurement input, 36
medium ac filter, 159, 162
medium filter, 162, 164
memory
clearing, 131
stored states, 213
viewing alarm data, 198
viewing readings, 187
memory available, 187
memory limits, 187
memory storage, 167
Menus, 116
menus
front panel, 73
message
front panel, 217
Messages Displayed, 115
Microsoft Visual Basic, 98
Microsoft Visual C, 98
Microsoft Visual Studio, 98
Module key, 75
modules
general purpose switching, 233
installing, 60
installing with cables, 60
installing with terminal blocks, 62
matrix, 233
multiplexer, 233
system control, 234
monitor mode, 189

multiplexer modules
list, 233
specifications, 233
multiplexer switching, 32
Mx+B scaling, 165

N

National Instrument's LabVIEW, 98
National Instrument's LabWindows/CVI, 98
network types, 89
noise rejection, 143
nominal resistance (RTDs), 156
non-sequential scanning, 185
non-volatile memory, 131
NPLCs, 145
number format, 218
number keypad, 51
number of digits, 143
numbering
slots, 235

O

odometer, 219
offset compensation, 160
On/Standby switch, 50
OPEN T/C, 154
operating conditions, 133, 134, 239, 242
overload, 142
OVLD, 142

P

password
calibration, 221
web browser, 104
paths (sequences)
catalog, 210
defining, 204
deleting, 210
executing, 207
executing on alarm, 209
querying definition, 207
valid commands, 205
pc connection, 88
pinouts
analog bus, 139
rear panel connectors, 54
plug-in modules, 29
electrical operating conditions, 242
environmental operating conditions, 239
system control, 234
User's Guides, 232
pollution degree definitions, 133
power line cycles, 145
power-on self test, 216
preset state, 227
product specifications. See 34980A Data Sheet (www.agilent.com/find/34980a)
programming conventions, 119
programming environments, 98
programming errors. See 34980A Programmer's Reference Help file

R

R0 values (RTDs), 156
rack mount kits, 70
rack mounting, 70
instrument dimensions, 72
reverse orientation, 71, 72
radix, 218
rail kits, 70
range, 142
selection example, 82
reading format, 184
reading memory available, 187
reading memory limits, 187
reading storage, 167
real-time clock, 218
rear panel
Analog Bus connector, 54
ext trig connector, 54
slot numbering, 52
recall stored state, 213
reference junction, 154
relative reading format, 184
relay cycle count, 219
relay odometer, 219
remote operation, 99
reset state, 224
resistance measurements, 160
offset compensation, 160
resolution, 143
rf and microwave switching, 35
RTD
nominal resistance, 156
R0 values, 156
types, 156
RTD measurements, 156
RTD types, 153

S

safety interlock, 149
annunciator, 56
safety notices, 4
sample count, 179
scaling, 165
scan interval, 172
Scan key (Configure menu), 74
Scan key (Measure group), 80
scan list, 137, 138, 170
scan sample count, 179
scan sweep count, 178
scan trigger, 172
scan trigger count, 177
scanning, 38, 167
adding channels, 170
external, 191
non-sequential, 185
on alarm, 174
overview, 137
rules, 137, 167
scanning with external instruments, 40
sccc numbering, 235
SCPI, 98, 107
Command Interface window, 108
commands, web entry, 107
errors, 215
language conventions, 119
version, 220
SCPI errors. See 34980A Programmer's Reference Help file
selecting a channel, 78

self test, 216
Sequence key, 75
sequences
catalog, 210
defining, 204, 205
deleting, 210
executing, 207
executing on alarm, 209
querying definition, 207
valid commands, 205
serial number, 213
setting the clock, 218
settling delay, 181
shielded cables, 237
signal routing and switching, 32
simulation mode (Safety Interlock), 149
single-ended mode, 152
site LAN
connecting the 34980 via, 90
description, 89
slot cover, 52
removal, 59
slot numbering, 52, 235
slow ac filter, 159, 162
slow filter, 162, 164
software, 25, 27
Agilent IO Libraries Suite, 88, 121
data logger, 25
for GPIB programming and control, 96
for LAN programming and control, 92, 95
for USB programming and control, 97
measurement, 25
revision, 205, 212
testing, 27
solder cup connectors, 237
specifications. See 34980A Data Sheet (www.agilent.com/find/34980a)
stand-alone DMM mode, 136
stop measurements, 137
Store/Recall key, 50
Store/Recall Menu, 73
stored readings
viewing, 187
stored states, 213
subnet mask, 126
sweep count, 178
syntax conventions, 119
system cabling, 29
system clock, 218
system control modules
list, 234
specifications, 234
system processor, 38

T

temperature limits, 133
temperature measurements, 153
temperature units, 153
terminal blocks, 237
installation, 68
wiring, 66
testing software, 27
text message, 217
thermistor
types, 157
thermistor measurements, 157
thermistor types, 153
thermocouple
reference junction, 154
types, 153, 154
time and date, setting, 76, 218
timeout, 164
totalizer, 43
track mode (alarms), 200
transducers and sensors, 30
transients, 134, 242
trigger count, 177
trigger delay, 147
automatic, 148
trigger interval, 172
trigger timer, 172
true RMS measurements, 158

U

updating firmware, 213
USB
connecting the 34980 via, 96
connector, 52
user-defined labels, 150
Utility key, 50
Utility Menu, 73

V

ventilation requirements, 240
View key, 75
viewing alarm data, 198
VM Complete, 192
VM Complete connector, 52
VM Complete connector, rear panel
connectors, 54
voltage measurements, 158
voltage output, 45
voltmeter complete, 192

W

web browser, 27, 100
allow full control mode, 103
Command History field, 110
launching, 100
modifying channel configuration, 106
opening and closing channel relays, 105
password, 104
SCPI, 108
SCPI command entry, 107
SCPI Quick Reference button, 110
use with LAN, 92, 95
using with LAN, 99
web control page, 102
WIRE1, 152
WIRE2, 152

Y

Y1130A Rack Mount Kit, 70
Y113xA cables, 237
Y114xA connectors, 237
YSI 44000 series thermistors, 153

THIS PAGE HAS BEEN INTENTIONALLY LEFT BLANK.

This information is subject to change without notice. Always refer to the Keysight website for the latest revision.

© Keysight Technologies 2004-2025
Edition 14, February 2025

Printed in Malaysia

34980-90005

www.keysight.com